CITY OF SOUTH JORDAN

Land Disturbance Design & Construction Standards

February 2008

City of South Jordan
1600 West Towne Center Drive
South Jordan, UT 84095

SOUTH JORDAN
UTAH

LAND DISTURBANCE
DESIGN AND CONSTRUCTION STANDARDS

ABBREVIATED
TABLE OF CONTENTS

SECTION	TITLE
1.0	INTRODUCTION AND GENERAL POLICIES
2.0	DESIGN CRITERIA
3.0	MATERIALS
4.0	PLAN PREPARATION
5.0	FEES, CHARGES AND REQUIREMENTS FOR AUTHORIZATION OF CONSTRUCTION
6.0	CONSTRUCTION STAKING
7.0	CONSTRUCTION
8.0	ABANDONMENT
9.0	TESTING
10.0	WORK AREA CLEAN-UP
11.0	REQUIREMENTS FOR FINAL ACCEPTANCE

APPENDIX A – Standard Drawings
APPENDIX B – Title 16.44- Land Disturbance Ordinance
Ordinance (Future)
APPENDIX C – City of South Jordan, Storm Water Management Plan
APPENDIX D – Land Disturbance Ordinance Plan Check Checklists
APPENDIX E – Land Disturbance Permit Application and Agreement
APPENDIX F – Erosion and Sediment Control Plan, Preconstruction Meeting Information
APPENDIX G – Land Disturbance Permit, Erosion Sediment Control Plan, Inspection and Maintenance Form
APPENDIX H – Mud Tracking/Erosion Control Guidelines for Inspectors

DETAILED
TABLE OF CONTENTS

SECTION	TITLE	PAGE
1.0	INTRODUCTION AND GENERAL POLICIES	
1.1	Scope	1-1
1.2	Authority	1-1
1.3	Interpretation	1-3
1.4	Definitions and Terms	1-3
1.5	Applicable Codes and Policy	1-19
1.6	Engineering Department Jurisdiction	1-20
1.7	Infrastructure Maintenance and Operations Department Jurisdiction	1-20
1.8	Community Development Department – Building Division	1-20
1.9	Developer Engineer's Responsibility	1-20
1.10	Referenced Specifications	1-21
1.11	City Engineer Acceptance	1-21
1.12	Metric Units	1-21
1.13	Construction Specifications	1-21
2.0	DESIGN CRITERIA	
2.1	Introduction	2-1
	General	2-1
	Design Professionals Qualifications	2-1
	Drainage	2-2
	Erosion and Sediment Control, Vegetation and Re-vegetation	2-2
	Master Plan Compliance	2-3
	Construction of the Project	2-3
	Responsible Agencies	2-4
2.2	Principles of Erosion and Sediment Control	2-4
	General	2-4
	Vegetation as a Solution	2-5
	Scheduling	2-6
	Land Grading for Minimizing Erosion	2-7
	Minimize Disturbance and Buffer Strip	2-8
2.3	Applications of Erosion and Sediment Control Practices	2-9
	General	2-9
	Erosion Control	2-9
	Runoff Control	2-10
	Sediment Control	2-11
2.4	Bioengineering Techniques	2-12
	General	2-12
	Conditions Where Practice Applies	2-12
	Planning Considerations	2-13
	Design Criteria	2-13
	Bioengineering Measures	2-14
	Inspection and Maintenance	2-14

DETAILED
TABLE OF CONTENTS

SECTION	TITLE	PAGE
2.5	Subdivision and Lot Design for Grading and Drainage	2-15
	General	2-15
	Preliminary Design Report	2-15
	Grading and Drainage report	2-15
	Final Design Report	2-18
	Subdivision Design for Grading and Drainage	2-18
	Lot Design for Grading and Drainage	2-18
	Structure Design for Drainage	2-18
2.6	Clearing, Grubbing and Stripping	
	General	2-19
	Vegetative Material Disposal	2-19
	Man-made Material Disposal	2-20
	Topsoil	2-20
2.7	Dust Control	
	General	2-20
2.8	Grading and Excavation	
	General	2-20
	Grading	2-20
	Excavation	2-21
	Fills	2-23
	Buttress Fills	2-26
	Topsoil	2-27
	Slope Protection	2-27
	Building Lots Requiring Additional Fill	2-27
2.9	Erosion Control and Drainage Devices	
	Intervening Terraces	2-28
	Diverter Terraces	2-28
	Vee Channels	2-28
	Inlet Structures, Down-drains and Outlet Structures	2-28
	Runoff Computations	2-29
	Drainage Dispersal Wall	2-29
	Sub-drains	2-29
	Site Drainage	2-29
2.10	Slope Erosion Protection	
	General	2-29
	Sediment and Erosion Control Standards	2-30
	Erosion Control BMP	2-31
	Erosion Control	2-31
	Interceptor, Roadway, and Toe Ditch	2-32
	Brush-layering	2-32
	Cellular Confinement System for Slope Stabilization	2-34
	Erosion Blankets and Turf Reinforcement Mats Slope Installation	2-34
	Live Staking	2-35
	Water-bars and Rolling Dips	2-36
	Slope Drain	2-37

DETAILED
TABLE OF CONTENTS

SECTION	TITLE	PAGE
	Biolog/Straw Rolls	2-38
	Surface Roughening	2-39
	Wattles	2-40
	Retaining Wall	2-41
	Temporary Landscape Irrigation System	2-42
2.11 Channel Erosion Protection		
	General	2-42
	Energy Dissipators	2-42
	Grass-Lined Channel	2-42
	Log Check Dam	2-44
	Riprap	2-44
	Rock-Lined Channel	2-48
	Straw Bale Sediment Barrier	2-48
	Straw Bale Dike	2-49
	Temporary Diversion Dike	2-50
2.12 Storm Drainage System		
	General	2-51
	Retention/Detention Basins	2-51
	Storm Drain System	2-51
	Storm Drain Sediment Protection	2-51
2.13 Streambank Erosion Protection		
	General	2-53
	Coir Roll and Coir Mats	2-54
	Gabions	2-55
	Structural Stream Bank Stabilization	2-57
2.14 Miscellaneous Erosion/Sediment Control Best Management Practices		
	General	2-58
	Construction Entrances	2-59
	Sedimentation Basins	2-60
	Concrete Structures	2-60
	Limits of Disturbance (LOD) Control	2-61
2.15 Vegetation and Revegetation		
	General	2-61
	Planting and Irrigation of Cut and Fill Slopes	2-61
	Vegetation and Re-vegetation Development Standards	2-62
	Effective Planting Plan	2-63
	Erosion Control/Re-vegetation Plan	2-66
	Permanent Seeding	2-67
3.0 MATERALS		3-1
3.1 General Requirements		3-1
3.2 Testing and Final Acceptance of Material		3-2
3.3 Topsoil		3-2
3.4 Erosion Control		3-3
3.5 Limits of Disturbance (LOD)		3-4
3.6 Erosion Control		

DETAILED
TABLE OF CONTENTS

SECTION	TITLE	PAGE
3.7	Retaining Walls	3-7
3.8	Landscape Irrigation System	3-7
3.9	Concrete Structures	3-7
3.10	Riprap	3-7
3.11	Retention/Detention Basins	3-8
3.12	Storm Drain System	3-8
3.13	Permanent Seeding	3-8
4.0	PLAN PREPARATION	4-1
4.1	General	4-1
4.2	Plan Preparation Responsibility	4-1
4.3	Sheet Size and Margins	4-1
4.4	Signature Blocks	4-1
4.5	Cover Sheet	4-1
	Index Map	4-2
	Vicinity Map	4-2
	Bench Marks	4-2
	General Notes	4-2
	As-built Materials List	4-3
	City Engineer's Certification for Approval to Construct	4-3
4.6	Grading Plan and Sediment Control Plan	4-6
4.7	Erosion Control and Revegetation Plan	4-9
4.8	Graphic Scales and North Arrow	4-9
4.9	Procedure for Approval	4-9
4.10	Plan Checking List	4-12
4.11	Standard Language for Dedication of Facilities to City	4-12
4.12	Standard Notes	4-12
5.0	FEES, CHARGES AND REQUIREMENTS FOR AUTHORIZATION TO CONSTRUCT	
5.1	General	5-1
5.2	Submittal of Blueline Prints (Plan Check)	5-1
5.3	Land Disturbance Permit Application Fee	5-1
5.4	Special Provisions	5-1
5.5	Easements	5-1
5.6	Agreements, Bonds, and Insurance Certificates	5-1
5.7	Approval for Construction	5-2
5.8	Special Charges	5-3
6.0	CONSTRUCTION STAKING	
6.1	General Requirements	6-1
6.2	Preservation of Stakes	6-1
6.3	As-Built Drawings	6-1
7.0	CONSTRUCTION	
7.1	General Requirements	7-1

DETAILED
TABLE OF CONTENTS

SECTION	TITLE	PAGE
	Use of this Section	7-1
	Quality of Materials	7-1
	Substitutions	7-1
	Quality of Workmanship	7-2
	Defective Work	7-2
	City Inspection, Field Acceptance and Guarantee	7-2
	Public Relations	7-3
7.2	Construction Sequence – Erosion/Sediment Control	7-3
7.3	Permits	
	Excavation Permit	7-4
	Explosives Permit	7-4
	Land Disturbance Permit	7-4
	Dust Control Permit	7-5
	Storm Water Pollution Prevention Permit	7-5
	Salt Lake County Development and Construction Permit	7-5
	Corp of Army Engineers 404 Permit	7-5
	Utah Department of Transportation (UDOT) Access Permit	7-5
	Utah Department of Transportation (UDOT) Enchroachment Permit	7-5
	Canal Company Discharge Permit	7-5
	Other Permits	7-5
7.4	Inspection	
	General Excavation and Grading Requirements	7-5
	Inspections of Excavations and Fills	7-7
	Additional Inspections or Testing	7-9
	Final Inspection	7-9
	Inspection of Individual Lots	7-9
7.5	Traffic Regulation	7-10
7.6	Clearing and Grubbing	
	General	7-10
	Removal and Disposal of Material	7-10
7.7	Utilities, Existing Facilities and Concrete Removal	
	Abandonment	7-10
	Utilities and Existing Facilities	7-10
	Concrete, Masonry or Mortared Construction Removal	7-11
7.8	Excavation and Trenching	
	General	7-11
	Excavation	7-12
	Shoring	7-12
7.9	Backfill and Compaction	7-12
7.10	Construction Water	7-13
7.11	Subgrade Preparation and Placement of Base Materials	
	General	7-13
	Subgrade Preparation	7-13
	Untreated Base	7-13
7.12	Concrete and Masonry Construction	
	General	7-13

DETAILED
TABLE OF CONTENTS

SECTION	TITLE	PAGE
	Concrete Structures	7-13
	Concrete Curbs & Gutters, Sidewalks, Cross Gutters and Driveways	7-14
7.13	Landscape and Irrigation Systems	
	General	7-14
	Testing	7-14
8.0	ABANDONMENT	8-1
8.1	General	8-1
8.2	Water Lines	8-1
8.3	Structures	8-1
8.4	Easements or Right-of-Ways	9-1
9.0	TESTING	9-1
9.1	General	9-2
9.2	Concrete Testing	9-3
9.3	Soils Testing	9-3
9.4	Storm Drainage System Testing	
9.5	Miscellaneous Testing	10-1
10.0	WORK AREA CLEAN-UP	
10.1	Final Project Clean-up	
11.0	REQUIREMENTS FOR FINAL ACCEPTANCE	
11.1	General	11-1
11.2	Field Acceptance	11-1
11.3	As-Built Drawings Originals	11-1
11.4	Itemized Cost/Additional Fees	11-2
11.5	Other Administrative Items/Including Easements	11-2
11.6	Approval for Acceptance	11-2
11.7	Status during Maintenance and Guarantee Period	11-2
11.8	Exoneration of Surety	11-2
APPENDIX A – Standard Drawings		
APPENDIX B – Title 16.44- Land Disturbance Ordinance		
APPENDIX C – City of South Jordan, Storm Water Management Plan		
APPENDIX D – Land Disturbance Ordinance Plan Check Checklists		
APPENDIX E– Land Disturbance Permit Application and Agreement		
APPENDIX F – Erosion and Sediment Control Plan, Preconstruction Meeting Information		
APPENDIX G – Land Disturbance Permit, Erosion Sediment Control Plan, Inspection and Maintenance Form		
APPENDIX H – Mud Tracking/Erosion Control Guidelines for Inspectors		

SECTION 1.0

INTRODUCTION AND GENERAL POLICIES

1.1 SCOPE

The City of South Jordan, Land Disturbance Design and Construction Standards, establishes uniform policies and procedures for the design and construction of City land disturbance, grading, erosion control, re-vegetation of disturbed areas and control of sediments resulting from construction of private development and City projects. It is not the intent of this standard that any standard of conduct or duty toward the public shall be created or imposed by publication of this standard. This standard is not a substitute for engineering knowledge, experience or judgment of professionals in their area of expertise in the agronomy, re-vegetation, conservation, and engineering discipline. This standard is neither designed as, nor does it establish, a legal standard for these functions. The methods and procedures contained herein are to be reviewed by the developer's engineer or designer using them as applicable to site-specific conditions of the project they are working on. Where actual site conditions deem these standards and procedures not applicable, the engineer or designer shall request a variance from these standards or procedures as provided herein.

The design and construction of grading, erosion control, re-vegetation and sedimentation facilities and other appurtenances in City of South Jordan are to comply with these standards herein called "Land Disturbance Design and Construction Standards (LDDCS)", or the permit requirements of various governing bodies, except where specific modifications have been approved, in writing, by the City Engineer. All submitted plans containing engineering principals shall be signed and stamped by a Civil Engineer and other appropriate professionals. Erosion control plans, re-vegetation plans and/or dust control plans are to be signed and stamped by a qualified Civil Engineer or other appropriate professional. All work is to be in accordance with good agronomy, conservation, and engineering practices.

This document sets forth the procedure for designing and preparing plans and specifications and specifications for area of land disturbances throughout the City. Wherever there are differences between these standards and other county, state or federal regulations, the most stringent or highest requirement shall govern. The specifications and standard drawings contained in this document are for all land disturbances throughout the City. The City has also prepared culinary water, road, and storm drain/flood control design and construction standards for those specific areas. The developer/developer's engineer is to obtain the other design and construction standards to determine how to design these other facilities.

1.2 AUTHORITY

Title 16 Chapter 44 of the City of South Jordan Municipal Code, establishes the legal authority for the erosion, sediment control and re-vegetation requirements set forth in this document. Title 16 Chapter 44, Land Disturbance was established partly as a requirement of the State of Utah's Utah Pollution Discharge Elimination System permit (UPDES) which is a federally mandated requirement of the State.

Since the passage of the Clean Water Act (CWA), the quality of our Nation's waters has improved dramatically. Despite the progress, however, degraded water bodies still existed and the federal government moved to improve the water quality in these water bodies. According to the

1996 Nation Water Quality Inventory, a biennial summary of State surveys of water quality, approximately 40- percent of surveyed U.S. water bodies are still impaired by pollution and did not meet water quality standards. A leading source of this impairment was indicated to be polluted runoff. According to the Inventory, 13-percent of impaired rivers, 21-percent of impaired lake acres and 45-percent of impaired estuaries are affected by urban/suburban storm water runoff and 6-percent of impaired rivers, 11- percent of impaired lake acres and 11-percent of impaired estuaries are affected by construction site discharges.

Phase I of the EPA's storm water program was promulgated in 1990 under the CWA. Phase I relies on National Discharge Elimination System (NPDES) permit coverage to address storm water runoff from: (1) "medium" and "large" municipal separate storm sewer systems (MS4s) generally serving populations of 100,000 or greater, (2) construction activity disturbing 5 acres of land or greater, and (3) ten categories of industrial activity.

The Storm Water Phase II Final Rule is the next step in EPA's effort to preserve, protect, and improve the Nation's water resources from polluted storm water runoff. The Phase II program expands the Phase I program by requiring additional operators of MS4s in urbanized areas and operators of small construction sites, through the use of NPDES permits, to implement programs and practices to control polluted storm water runoff.

Phase II is intended to further reduce adverse impacts to water quality and aquatic habitat by instituting the use of controls on the unregulated sources of storm water discharges that have the greatest likelihood of causing continued environmental degradation. Although the NPDES permit program is a national program, its implementation and permitting is delegated to the states. In the case of Utah, the program then becomes known as the Utah Pollution Discharge Elimination System (UPDES) program. Cities and other governmental entities are then required to receive a permit through the State of Utah under the UPDES permit program.

On March 10, 2003 Phase II of the NPDES became active and all cities smaller than 100,000 are required to submit a NPDES permit and application. In the case of cities in Utah, this became a UPDES permit application that is submitted to the State of Utah, Department of Environmental Quality (DEQ).

The City of South Jordan (City) is subject to Phase II regulations. The City's UPDES permit requires, at a minimum, that the City develop, implement, and enforce a storm water management program designed to reduce to the "maximum extent practicable" the discharge of pollutants from the storm drain system to protect water quality, and to satisfy the requirements of the CWA.

The City's storm water management program must include the minimum control measures included in the General Permit. Implementation of BMP's that comply with permit requirements constitutes compliance with the standard of reducing pollutants to the maximum extent practicable.

In the City's permit application, the City identified and submitted the following information to the State DEQ:

1. The City will implement BMP's for each of the following six minimum control measures:

    a. Public Education and Outreach
    b. Public Involvement/Participation
    c. Illicit Discharges and Improper Disposal

d. Construction Site Storm Water Runoff Control
e. Post-Construction Storm Water Management in New Development and Redevelopment
f. Pollution Prevention/Good Housekeeping for Municipal Operations

2. The measurable goals for each of the BMPs including, as appropriate, the months and years in which the City was to undertake required actions, including interim milestones and the frequency of the action; and

3. The person(s) responsible for implementing or coordinating the City's storm water management program.

1.3 INTERPRETATION

The City Engineer will decide all questions of interpretation of "Best Management Practices" as it applies to good agronomy, re-vegetation, conservation, and engineering practices. The City Engineer may use the future ASTM standards and various standards obtained in published engineering studies and industry publications to guide him or her.

1.4 DEFINITIONS AND TERMS

Whenever in these specifications or in any document or instruments where these specifications govern, the following terms, abbreviations or definitions are used, the intent and meaning shall be interpreted as follows:

ABBREVIATIONS

AASHTO	American Association of State Highway and Transportation Officials
A.B.	Aggregate Base
A.S.B.	Aggregate Subbase
A.C.	Asphaltic Concrete Type A
ACI	American Concrete Institute
ADT	Average Daily Traffic in vehicles per 24 hours
ANSI	American National Standards Institute
APWA	American Public Works Association
ASCE	American Society of Civil Engineers
ASTM	American Society for Testing and Materials
AWWA	American Water Works Association
BMP	Best Management Practice
cfs	Cubic feet per second
EP	Edge of pavement
ES	Edge of shoulder
F	Degrees, Fahrenheit
ft.	Foot
gpm	Gallons per minute
L.O.D.	Limits of Disturbance
Max.	Maximum
Min.	Minimum
O&M	Operations and Maintenance

P.C.C.	Portland Cement Concrete Structures Class A (6 sack) Pavement Minimum Class B (5 sack) Curb, gutters, driveways and walks Class B (5 sack) Higher classes shown on plans will govern
PLS	Pure live seed
psi	Pounds per square inch
PUE	Public Utility Easement
TYP	Typical
UBC	Uniform Building Code
UOSHA	Utah Occupational Safety and Health Administration
UPC	Uniform Plumbing Code

Symbols

C	Centerline
ROW	Right of way line
FL	Flow line
PL	Property line
"R"	Value
≥	Equal to or greater than
≤	Equal to or less than

DEFINITIONS

"Actual Restoration and Re-vegetation Costs"	Costs set by City resolution or ordinance. In the absence of City resolution and/or ordinance or the actual restoration and re-vegetation costs will be determined by three competitive re-vegetation bids conforming to this chapter and 10 percent of the excavation portion of the original bid. In the event the actual re-vegetation costs are challenged by the applicant the cost will be determined as stated herein.
"Agricultural activity"	Plowing, disking, and harrowing the ground surface for the purpose of planting and cultivating crops on parcels historically used for this purpose.
"Anchored Mulch"	Mulch which employs netting, staple, or fastener to anchor material to the soil and/or a mulch material that is crimped or tacked to the soil surface by mechanical means.
"Applicant"	Means any person who submits an application for a permit pursuant to Title 16 Chapter 44, "Land Disturbance".
"Approved" by the City Engineer.	Unless specifically otherwise indicated, this shall mean approval
"Bale Dike"	A bale dike is a temporary barrier consisting of bales installed across a slope, at the toe of a slope, and/or around the perimeter of the construction site.

"Bale Sediment Barrier"	A semi-pervious sediment barrier is a temporary barrier consisting of bales and a rock spillway placed across small drainages or gently sloping swales.
"Best Management Practices"	Practices, procedures or designs used as a standard for a given industry. In this specific case, these 'practices' are for the erosion control industry. Best Management Practices (BMP's) for controlling non-point sources of pollution are the methods, measures, practices, or a combination of practices determined to be the most effective and practicable means (including technological, economic, and institutional considerations) to control non-point pollutants at levels compatible with environmental quality goals. As used in this document, BMP's are synonymous with erosion and sediment control measures.
"Biochemical Oxygen Demand (BOD)"	Consumed during a biochemical oxidation of matter over a specified period of time.
"Bioengineering"	Bioengineering is a method of construction using living plants, or plants in combination with non-living or structural materials. The practice brings together biological, ecological, and engineering concepts to produce living, functioning systems to prevent erosion, to stabilize slopes and to enhance wild life habitat. The application of vegetative practices combined with structural practices to provide a system of practices that create a stable site condition.
"Brush-layering"	Cuttings or branches of easily rooted woody species are layered between successive lifts of soil fill to construct a reinforced slope or embankment. Live branch cuttings laid in crisscross fashion on terraces between successive lifts of soil.
"Buffer Setback"	A strip of land that separates land uses for aesthetic reasons or separate incompatible uses, i.e. residential from Industrial.
"Buffer Strip"	An undisturbed strip of land containing grasses, shrubs and trees adjacent to water bodies engineered for the treatment of storm water.
"Buttress Fill"	A buttress fill is a designed compacted earth fill used for providing lateral support to an un-stabilized earth or rock mass.
"Cellular Confinement System"	A three-dimensional, honeycomb earth-retaining structure used to mechanically stabilize the surface of earth and fill slopes.

"Check Dam"	A check dam is a small temporary dam constructed across a swale, gully, or drainage way to collect sediment and slow water velocities.
"City"	City of South Jordan, Utah
"City Engineer"	City Engineer shall mean the City Engineer of City of South Jordan, or the person(s) engaged by the City and authorized to perform the duties assigned to the City Engineer, and shall include any deputies and representatives.
"Civil Engineer"	A professional engineer in the branch of civil engineering holding a valid certificate of registration issued by the State of Utah.
"Class IV Landfill"	A landfill that is to receive only construction/demolition waste, yard waste, inert waste, dead animals, or upon meeting the requirements of Section 26-32a103.5 and section R315-320-3, waste tires and materials derived from waste tires.
"Clearing & Grubbing"	Moving, removing, displacing, and/or stockpiling, by manual or mechanical means, trees, and other vegetation and/or the top organic layer as described in the geotechnical report. In the absence of a geotechnical report the organic layer will not be greater than eight (8") inches.
"Coir Rolls and Coir Mats"	Coir rolls and coir mats are manufactured from coconut fibers and are frequently used as the structural and rooting medium for bioengineering systems.
"Community Development Director"	That person charged with the responsibility of directing all phases of the Community Development Department and the enforcement of all State statutes and City laws pertaining to his/her office, or his/her duly authorized representative.
"Compaction"	The act of compacting or consolidating soil and rock material to a specified density, and the resulting compacted state of the material.
"Construction site"	Any land area on which the activity of clearing and grubbing, grading, excavating, or filling is occurring.
"Continuous Berm"	A continuous berm is a temporary diversion dike or sediment barrier constructed with infill material, either soil, sand or aggregate, encased within geosynthetic fabric.
"Contract Documents"	The documents used in the construction of a given project including: written and drawings. Written documents may include, but not limited to, the 'Bidding and Agreement Forms and Bonds", "Conditions of the Contract" and "Technical

	Specifications". The drawings for the project are also legally considered part of the Contract Documents and are referenced as such in the written portion of the Contract Documents.
"County"	Salt Lake County, Utah
"Crib Structure"	A hollow structure constructed of mutually perpendicular, interlocking beams or logs.
"Curb Inlet Sediment Barrier"	Curb inlet sediment barriers are temporary barriers constructed from concrete block and gravel or gravel filled sandbags.
"Cutting"	A branch or stem pruned from a living plant.
"Day"	Shall be interpreted as a calendar day, unless otherwise specified.
"Dentrification"	A biological process in which nitrate (NO3), a compound of nitrogen often found in sewage or water, is turned into nitrogen gas, which can dissipate into the atmosphere.
"Detention"	The holding back or delaying of the flow of water, through manmade or natural means.
"Detritus"	A loose mass of decaying material
"Developer"	An individual or organized group; partnership, corporation, etc.; proposing to subdivide or improve land which will require culinary water from the City's system.
"Developer's Engineer"	The engineer licensed by the State of Utah as a civil engineer, employed by the developer, under whose direction construction plans, profiles and details of the work are prepared and submitted to the City for review and approval.
"Dredging"	The practice of deepening a waterway by mechanical means by the removal of sediments.
"Drop Inlet Sediment Barrier"	A drop inlet sediment barrier is a temporary barrier placed around a drop inlet. The sediment barrier may be constructed of bales, wattles, and gravel, gravel and stone, block and gravel, or silt fence material.
"Dry Ravel"	Pertains to slopes whose soil materials are of such a consistency that they separate without the action of water, causing rills, gullies and other types of erosion. This would occur in soil materials where there is very little binder material such as clays and finer silts.

"Earthen Berm"	An earth mound used to direct flow of runoff around or through an area.
"Easement"	A recorded document in which the landowner gives the City permanent rights to construct and maintain City facilities across private or other property.
"Emergent Plants"	Aquatic plants that are rooted in the soil but whose leaves are at or above the water surface.
"Energy Dissipator"	An energy dissipator is a structure designed to slow water velocity and control erosion and encourage sediment entrapment at the outlet of a channel or conduit.
"Enforcement Authority"	The City Engineer, the Engineering Inspector and other designated representatives of the City Engineer, or any duly appointed Code Enforcement Officer or police official charged with the responsibility for enforcement of the provisions of the laws and ordinances of the City of South Jordan.
"Engineer"	A professional engineer or firm of professional civil engineers appointed by and acting for the Engineering Department in the case of a City sponsored capital project. In the case of a developer-sponsored project, the term refers to the engineer hired by the developer and may also be referred to as "developer's engineer".
"Engineering Department"	The City department responsible for planning, designing and construction of the City's roadways and bridges, culinary water, sewer, secondary water and storm drainage systems.
"Engineering Geologist"	An engineering geologist registered by the State and capable of applying the geological sciences to engineering practices for the purpose of assuring that the geological features affecting the location, design, construction, operation, and maintenance of engineering works are recognized and adequately provided for.
"Engineering geology"	The application of geologic knowledge and principles in the investigation and evaluation of naturally occurring rock and soil for use in the design of civil works.
"Erosion"	The process of detachment of soil particles or other surface material by the action of wind, water, snow or ice.
"Erosion Control"	Erosion control is any practice that protects the soil surfaces and prevents the soil particles from being detached by rainfall or wind. Erosion control, therefore, is a source control that treats the soil as a resource that has value and should be kept in place.

"Erosion Control Blankets and Mats"	The installation of protective mulch blankets or soil stabilization mats (turf reinforcement mats) to the prepared soil surface of a steep slope, channel or shoreline.
"Erosion Control Hazard"	An area or areas located within the boundaries of the City, which has been identified by the City Engineer and/or the Erosion Control Specialist as an erosion control hazard area due to the existence of steep slope terrain and/or erosive soils.
"Erosion Control Measures"	The structural and nonstructural Best Management Practices (B.M.P) that prevents displacement of soil particles by wind or water. This includes seeding, mulching, vegetative buffer strips, sod, plastic coverings, riprap, gabions, channel armoring methods, and other measures that prevents the displacement of soil particles.
"Erosion Control Plan Preparer"	A person having the qualifications list herein for Erosion Control Specialist.
"Erosion Control Specialist"	A person having at least ten years of professional level experience in the erosion and sediment control field or a civil engineer having at least six years of professional level experience in the erosion and sediment control field or a Soil Scientist having certified by the American Registry of Certified Professionals in Agronomy and having two years of professional level experience.
"Established Vegetation"	Vegetation that has been planted, germinated, and has growth to accomplish the following: (a) provide a ground cover equivalent to an adjacent undisturbed site. (b) a growth of a native community that is representative of an adjacent undisturbed site. (c) the lack of rill and gully erosion
"Expansive Soil"	Soil with an expansion of four-percent or more with a sixty pound per square foot load applied under standard test methods as set forth by the City Engineer.
"Face Planting"	Planting live cuttings and other vegetation in the frontal openings of retaining structures.
"Field Acceptance"	Field acceptance is when the Engineering Department inspector approves the physical installation of the water system, roads, storm water, sewer, etc.
"Fill"	Deposits of soil, rock, or other materials placed by man.
"Filter Fabric"	A geotextile of relatively small mesh or pore size that is used to (a) allow water to pass through while preventing sediment from passing through, (b) preventing the mixing of soils into a B.M.P

"Filter Strips"	Vegetated strips of land designated to filter storm water and encourage the settlings of pollutants. The vegetation is usually comprised of grasses, not trees or shrubs. Filter strips may be considered as a particular kind of buffer, one specifically engineered to reduce pollutant loads.
"Final Acceptance"	The City Engineer acceptance or final acceptance follows field acceptance and is when the City Engineer approves both physical improvements as well as the administrative items associated with development, and the Infrastructure Maintenance and Operations Department accepts ownership and operations and maintenance responsibilities.
"Finished Grade"	The final grade or elevation of the building site, slope or terrace (0.1 plus or minus feet). "Gabion" Rectangular wire baskets filled with stones used as pervious, semi-flexible building blocks. Live rooting branches may be placed between the rock-filled baskets.
"Geotechnical Engineer"	A civil engineer as described herein with experience of at least ten years as a geotechnical engineer.
"Grade"	The elevation of the ground surface as measured from a known vertical control. Existing Grade means grade currently on the site. Natural grade means the grade unaltered evidenced by the presence of indigenous plants and grasses.
"Grade Stabilization"	The maintenance of a gentle, non-eroding gradient on a watercourse of land surface.
"Grading"	Includes the act or result of digging, excavating, transporting, spreading, depositing, filling, compacting, settling, or shaping of land surfaces and slopes, and other operations performed by or controlled by human activity involving the physical movement of rock or soil.
"Grading and Erosion Control Design and Construction Standards"	The City of South Jordan Land Disturbance Design and Construction Standards.
"Gravity Retaining Walls"	Retaining structures that resist lateral earth forces and overturning primarily by their weight.
"Gulley"	A narrow, rocky valley or channel with steep sides, made by a fast flowing stream
"Headcut Structure"	Where a gully grows and lengthens at its upstream end is called the head-cut or 'nick point'. Head-cut structures consist of rocks, sandbags or other erosion resistant materials placed at the gully

	head-cut to prevent erosion. These components may be used with live willow stakes to promote vegetative growth.
"Hydraulic Planting"	Hydraulic planting is a method of applying erosion control materials (mulch) to bare soil and establishing erosion-resistant vegetation on disturbed areas and critical slopes.
"IBC"	International Building Code
"Induced Wetlands"	Those areas that are inundated by seasonal irrigation Page 11 of 22water which is intended for agricultural purpose.
"Public Works Department"	The City department responsible for operations and maintenance of the City's roadway, culinary water, secondary water, sanitary sewer, and storm drainage system.
"Inspector"	An employee or agent of the City engaged to observe and record field compliance with design criteria, plans and construction standards.
"Land Disturbance"	Any disturbance of native soils, plants, or environment, which causes degradation of the environment and makes it more subject to erosion. Such activities include clearing and grubbing, grading excavation, filling, dredging, construction of earth-filled dams and any other types of earthwork.
"Land Disturbance Design and Construction Standards"	The City of South Jordan Land Disturbance Design and Construction Standards which have been prepared by City staff and reviewed, approved by the City Engineer.
"Land Disturbance Permit"	The land disturbance permit required by the City in order to initiate any type of land disturbance including pioneering roads, deposition of fill material, excavation of soil material, general grading, or other activity conducted by man which will disturb natural vegetation or soil.
"Landfill"	A disposal facility where solid waste is placed in or on the land and which is not a land treatment facility or a surface impoundment. The definition of a landfill is as found in the state codes R315-301-2- 37.
"Land Grading for Minimizing Erosion"	Land grading for minimizing erosion is grading that is intended to minimize the impacts of surface erosion and runoff.
"Landscape Architect"	A landscape architect licensed as such under the laws of the State.
"Land-treatment Land-farming"	Land-treatment, land-farming, or landscaping facility, means a facility or a part of a facility where solid waste is applied onto or

	incorporated into the soil surface for the purpose of biodegradation," The definition of a land-treatment facility is found in the state codes R315-301-2- 38
"Lateral Earth Pressure"	The horizontal pressure exerted by soil against a retaining structure.
"Limits of Disturbance (L.O.D.)"	Means the area of total land disturbance including area to be graded, soil stockpile areas, staging areas and additional area required to accomplish the required grading.
"Lined Channels"	Vegetation lining a natural or constructed waterway, swale or dike to protect it from erosion.
"Live Branch Cuttings"	Living, freshly cut branches of woody shrub and tree species that propagate from cuttings embedded in the soil.
"Live Cribwall"	A hollow, structural wall formed out of mutually perpendicular and interlocking members, usually timber, in which live cuttings are inserted through the front face of the wall into the crib fill and or natural soil behind the wall.
"Live Fascines"	Bound, elongated sausage like bundles of live cut branches that are placed in shallow trenches, partly covered with soil, and staked in place to arrest erosion, shallow soil mass movements, and establish vegetation.
"Live Staking"	Live stake planting involves the insertion and tamping of live, vegetative cuttings into the ground in a manner that allows the stake to take root and grow.
"Lot Level"	Design, construction and infrastructure related specifically to a given lot. The comparison of 'lot level' facilities versus 'subdivision level' facilities is the issue of concern.
"Manufacturer's Recommendation"	The published recommendations of the manufacturer of a specific product for a specific application. In some situations additional manufacturer recommendations would be in order to receive and use. These recommendations are to address the site-specific conditions, site-specific recommendations, and be authored by an employee of the manufacturer. All recommendations will not be interpreted by the City as a guarantee or warranty.
"Mass Movement"	The movement of large, relatively intact masses of earth and or rock along a well-defined shearing surface as a result of gravity and seepage.
"Minimize Disturbance	

and Buffer Strip"	Minimizing disturbance and maintaining buffer strips is a planning process which retains natural vegetative cover and also maintains undisturbed vegetative buffer strips near watercourses.
"Mulch Protection"	A verifiable method of protecting the seed prior to, during and after germination, until the vegetation is established enough to prevent erosion for specific site protection. The mulch protection is to last a minimum of three months to a maximum of four years.
"Mulching"	Mulching is the application of a protective layer of virgin wood fiber or other suitable material to the soil surface. Mulch and/or hydromulch are also used in conjunction with seeding and hydroseeding of critical areas for the establishment of temporary or permanent vegetation. Mulching with straw or wood fiber mulch is commonly used as a temporary measure to protect bare or disturbed soil areas that have not been seeded.
"NPDES"	The National Pollution Discharge Elimination System of the U.S. Environmental Protection Agency and its related requirements. Phase I of the NPDES became effective in 1993 and governed large and medium sized municipalities, and construction sites of 5 acres or more. Phase II was approved on October 29, 1999 and will directly affect activities in City of South Jordan, including all construction sites of 1 acre or more.
"Native Planting Window"	The time period during which native planting materials or seeds are most likely to produce live plant material. This usually occurs during the spring and fall of each year when natural moisture may be available in assisting native plant species in germinating.
"Natural Runoff Channel or Stream"	The predevelopment condition of naturally occurring channels or streambeds. Streambeds or channels caused by naturally occurring water flows. Not man-made.
"Normal Inspection Hours"	Services provided pursuant to or in connection with the provisions of this title shall mean from 8:00 a.m. to 5:00 p.m., Monday through Friday, except holidays. Holidays shall be defined as those weekdays (exclusive of Saturday's) shown as nonworking days on the working day calendar of the City.
"Notice of Noncompliance/ Notice to Correct"	The notice issued by the Enforcement Authority for required action to achieve compliance with the provisions of this chapter.
"Notice of Violation"	A notification issued by the City of a violation or alleged violation of the grading, erosion control, or sedimentation control provisions of this chapter, in which is specified the nature of the violation and the degree of sanctions imposed.

"Opacity"	The factor that is used to determine the thickness or density of fugitive dust leaving a site.
"Overland Release"	An area, swale, or structure that provides for the passage of storm water runoff exceeding the design-frequency storm event of the storm water conveyance system.
"Owner"	May be either the City, individual homeowner, or Developer of the project, depending upon the stage the project. Typically the Developer is the Owner up to and including the time the project is accepted by the City. After final acceptance, the City would be typically considered to be the Owner or ownership responsibilities would be passed on to individual homeowners. The City will own public rights-of-way and private property owners will have ownership of the lots.
"Permanent Seeding"	The establishment of a permanent, perennial vegetative cover on disturbed areas from seed.
"Permit"	See land disturbance permit.
"Permit Holder"	The applicant in whose name a valid permit is issued pursuant to this chapter and the applicant's agents, employees, and designated representatives.
"Person"	Any individual, corporation, partnership, association of any type, public agency, or any other legal entity.
"Photodegradable polypropylene"	Material used in conjunction with erosion blankets and turf reinforcement mats which deteriorates with exposure to sunlight. It initially protects the slope or other denuded area from wind and water erosion, provides seed bed protection, and then deteriorates allowing plant materials to grow up through the material.
"Plans"	Drawings of erosion control measures, roadways, bridges, water pipelines, reservoirs or other structural/nonstructural devices.
"Planting Date"	The date native seed can be applied without temporary irrigation, October 15, through May 1, or as determined by the City's Engineering Department.
"Plate No."	Where not specified to the contrary, this refers to plates attached to these standards.
"Project"	A site that has obtained Final Plat approval from City.
"Pure Live Seed (P.L.S.)"	The actual amount of seed applied to a disturbed area to be re-vegetated. To determine P.L.S. multiply the percent of purity

shown on the seed tag by the percent germination shown on the seed tag then by 100.

"Quadrant Frame Method" — The method of random sampling of an area to determine successful re-vegetation. The following items will be compared to an adjacent undisturbed site: (a) on herbaceous canopy cover equivalent to an adjacent undisturbed site to provide protection against drought and erosion from wind or water. (b) a growth of a native vegetative that is representative of a adjacent undisturbed site species abundance. (c) the lack of rill and gully erosion.

"Required" — Unless specifically otherwise indicated, this shall mean a requirement of the City Engineer.

"Restoration and Re-vegetation Costs" — Costs required for the restoration of disturbed areas and which are set by City resolution or ordinance on a subdivision level.

"Retention" — The holding of runoff in an area without release except by means of evaporation, infiltration, or emergency bypass.

"Revetment" — A facing, as of stone or concrete, to sustain an embankment.

"Riparian Area" — A strip of land that borders a stream or river, often coincides with the maximum water surfaces elevation of the 100 year or record storm.

"Riprap" — Riprap is a layer of stone or rock designed to protect and stabilize areas subject to erosion.

"Rock Lined Channel" — Rock-lined channels are channels or roadside ditches lined with rock or riprap.

"Rough Grade" — The approximate elevation of the ground surface conforming to the proposed design (0.5 plus of minus feet).

"Scheduling" — Sequencing the construction project to reduce the amount and duration of soil exposed to erosion by wind, rain, runoff, and vehicle tracking. The construction sequence schedule is an orderly listing of all major land-disturbing activities together with the necessary erosion and sedimentation control measures planned for a project. This type of schedule guides the contractor on work to be done before other work is started so that serious erosion and sedimentation problems can be avoided.

"Sediment" — The transport of soil or earth material by wind, water, snow or ice.

"Sediment Control" — The structural and nonstructural Best Management Practices that contains the deposited, displaced soil particles caused by erosion.

	This may include (but not limited to) dikes, sediment detention traps, sediment detention basins, filters, fences, barriers, swales, berms, drains, check dams, and other measures that control the deposition of soil or earth material.
"Sedimentation"	The deposition of soil or earth material by wind, water, snow or ice.
"Sequence of Construction"	The suggested procedure of land disturbance and land reclamation to accomplish the goals of this chapter within the City.
"Sheet-flow"	A runoff characteristic which water flows over the land as a thin even layer, not concentrated.
"Silt Fence"	A silt fence is a temporary sediment barrier consisting of filter fabric attached to supporting posts and entrenched in the soil.
"Site"	A parcel or parcels of real property owned by one or more than one person on which activity regulated by this chapter is occurring or is proposed to occur.
"Slope"	A portion of ground forming a natural or artificial incline, including a retaining wall.
"Slope Drain"	A temporary slope drain is a flexible tubing, pipe, overside drain, or other conduit extending from the top to the bottom of a cut or fill slope.
"Slope Scaling"	This remedial activity (usually done by manual labor) involves grading the slope to fill in rills and gullies, slumps, and other depressions that concentrate surface runoff. Slope scaling is necessary to repair slopes prior to wattling, brush packing or erosion control blanket installation.
"Solid Waste Landfill"	Solid waste means any garbage, refuse sludge, including sludge from a waste treatment plant, water supply treatment plant, or air pollution control faulty, or other discarded material, including solid, liquid, semi-solid, or contained gaseous material resulting from industrial, commercial, mining, or agricultural operations and from community actives but does not include solid or dissolved materials in a domestic sewage or in a irrigation return flows or discharges for which a permit is required under Title 19, Chapter 5, Water Quality Act or under the Water Pollution Control Act, 33 U.S.C., Section 1251, et, seq. The definition of a solid wasteland fill is found in the state statues 19-6- 102-17(a).
"Slough Wall"	A wall designed to retain nuisance earth material and keep it in place.
"Soil"	All earth material, of whatever origin, which overlies bedrock.

"Soils Engineer"	A civil engineer duly registered by the State who is experienced in soil mechanics and slope stability analysis. His primary duties shall encompass the investigation of proposed grading sites and plats as related to the stability of the finished graded product. The soils engineer shall have proper laboratory facilities available in which to perform any and all testing required to properly evaluate materials under consideration.
"Staff Engineer"	A registered civil engineer employed by the City and designated by the City Engineer to act on the City's behalf.
"Standard Drawings"	The City's standard drawings for construction projects contained in this standard in Appendix A. Standard drawings also refers to those drawings contained in other design and construction standards of the City including Culinary Water, Road and Bridge, Storm Drain and Flood Control design and construction standards.
"Step Transect Method"	The method of sampling of an area to determine successful re-vegetation. The following items will be compared to an adjacent undisturbed site: (a) on herbaceous canopy cover equivalent to an adjacent undisturbed site. (b) a growth of native vegetative that is representative of a adjacent undisturbed site species abundance. (c) the lack of rill and gully erosion.
"Structural Streambank Stabilization"	Stabilization of eroding stream-banks with designed structural measures.
"Structure"	Anything constructed or erected which requires location on the ground or is attached to something having location on the ground.
"Subdivision Level"	Design, construction and infrastructure related generally to subdivision systems such as drainage, culinary water, wastewater systems, etc. The comparison of 'subdivision level' facilities versus 'lot level' facilities is the issue of concern.
"Surface Roughening"	A technique for roughening a bare soil surface with furrows running across the slope, stair stepping, or tracking with construction equipment. Tracks must be accomplished with indentations running on the slope contour.
"Swales"	Shallow grassed trenches that are wider than they are deep that provide a specific pathway for incoming flow.
"Technical Specifications"	Sections of the construction specifications in Appendix B of the Land Disturbance Design and Construction Standards
"Temporary Sediment	

Basin"	A pond created by excavation in construction of an embankment and designed to retain or detain runoff sufficiently to allow excess sediment to settle.
"Temporary Seeding"	The establishment of a temporary vegetative cover on disturbed areas by seeding with appropriate and rapidly growing annual grasses and/or forbs.
"Terrace"	A horizontal surface or step in a slope.
"Theoretical Detention Time"	The time for a runoff event is the average time parcels of water reside in the basin over the period of release from the B.M.P.
"Top-soiling"	Top-soiling is the preservation and use of topsoil to enhance final site stabilization with vegetation.
"Vegetated Structures"	A retaining structure in which living plant materials, cuttings, or transplants have been integrated into the structure.
"Vegetative Cuttings"	Live, cut stems and branches of plants that will root when embedded or inserted in the ground.
"Vegetative Measures"	The use of live cuttings, seeding, sodding, and transplanting in order to establish vegetation for erosion control and slope protection work.
"Verifiable Testing Method"	A method or material that has been tested by an independent testing facility under similar conditions. Example, existing site conditions have sandy soil with slope of a slope of 2 feet horizontal to one foot vertical (2:1). An acceptable erosion control material would have published test results in sandy soil with slope of 2:1. (i.e. Texas Transportation Institute, Utah Water Research Lab)
"Water-bars and Rolling Dips"	Ridges or ridge-and-channels constructed diagonally across a sloping road or utility right-of-way that is subject to erosion.
"Water Quality B.M.P"	A B.M.P. specifically designed for pollutant removal
"Watercourse"	A river, stream, creek, canal, basin, lake, pond, waterway, or channel, natural or man-made, having a defined bed and banks. Whenever a watercourse consists of both an ordinary channel and an overflow channel, the watercourse is deemed to include all property lying between the banks of the overflow channel. Watercourse would include both perennial and ephemeral flows situations.
"Wattles"	Wattles or live fascines are live branch cuttings, usually willows, bound together into long, cigar shaped bundles used to stabilize

slopes and stream-banks. Wattles may also be straw materials used for temporary sediment control.

"Wet Weather Plan" — A detailed erosion and sediment control plan and construction sequence that clearly shows how construction will process after October 1 of each year until May 1, of each year.

"Wetlands" — Those areas that are inundated or saturated by surface or ground water at a frequency sufficient to support, and that under normal circumstances do support, a prevalence of vegetation typically adapted for life in saturated soil conditions, such as swamps, bogs and marshes. Jurisdictional wetlands are those wetlands regulated by the U.S. Army Corps of Engineers.

"Yard Waste" — Vegetative cover matter resulting from landscaping, land maintenance, and clearing operations including grass clippings, pruning, and other discarded material generated from yards, gardens, parks, and other similar types of facilities. Yard waste does not include garbage, paper, plastic, sludge, septage, or manure.

1.5 APPLICABLE CODES AND POLICY

A. Ordinances, requirements and applicable standards of governmental agencies having jurisdiction within the City's service area shall be observed in the design and construction of roadways. Such requirements include but are not limited to current revisions of the following:

1. Municipal Code of City of South Jordan
2. State of Utah, Department of Environmental Quality, Division of Solid and Hazardous Waste, Solid Waste Permitting and Management Rules, R315-301 through 320
3. State of Utah, Department of Environmental Quality, Division of Air Quality (Dust Control Permit Requirements)
4. State of Utah, Department of Environmental Quality, Division of Water Quality (UPDES Requirements)
5. U.S. Army Corp of Engineers
6. Natural Resources Conservation Service

A complete listing of all reference material is included in the back of these standards.

B. The clearing, grubbing and disposal of vegetative material needs to be in accordance with State and county regulations, which apply to solid waste. This type of material has been determined to meet the requirements of solid waste as defined earlier in this section. Regulations which affect this disposal include:

1. R315-301-4 Prohibition of Illegal Disposal or Incineration of Solid Waste states:

   "No person shall incinerate, burn, or otherwise dispose of solid waste in any place except at a facility which is in compliance with the requirements of Rules 315-301 through 320 and other applicable rules."

2. The regulations dealing with landfills are enforced on the local level by the counties the landfill or alleged violation to landfill regulations is in. In the event, the counties regulations are more restrictive than the State regulations the counties regulations govern. Salt Lake County regulations are more restrictive than the states, so the Salt Lake County's regulations govern.

1.6 ENGINEERING DEPARTMENT JURISDICTION

The Engineering Division is responsible for all land disturbance activities throughout the City until said areas have been stabilized with vegetation, asphalt, or concrete and accepted by the City.

1.7 INFRASTRUCTURE MAINTENANCE AND OPERATIONS DEPARTMENT JURISDICTION

The Public Works Department is responsible for the operation and maintenance of all public roadways, sanitary sewer, storm drainage, secondary water and culinary water systems within the public right-of-way of the City.

1.8 COMMUNITY DEVELOPMENT DEPARTMENT – BUILDING DIVISION

The Building Division is responsible for the residential and commercial building sites after final grade has been reached. The re-vegetated areas outside of the right-of-way and storm water management facilities are the only exceptions.

1.9 DEVELOPER ENGINEER'S RESPONSIBILITY

These standards establish uniform policies and procedures for the design and construction of the City grading, erosion, re-vegetation and sediment control facilities. This standard is not a substitute for the knowledge, experience, or judgment of professionals in their respective area of expertise in the agronomy, re-vegetation, conservation, and engineering discipline. The methods and procedures contained herein shall be reviewed by the developer's engineer or designer using them as applicable to site-specific conditions of the project they are working on. Where actual site conditions deem these standards and procedures not applicable, the engineer or designer shall request a variance from these standards or procedures as provided herein.

It is the developer engineer's responsibility to be aware of the City's ordinance for grading, erosion, re-vegetation, and sedimentation control improvements and to indicate any areas, which requires work in these areas. This responsibility shall include investigating any changes from the Master Plan necessitated by development subsequent to the Master Plan, although the above shall not relieve the developer from the responsibility to provide an approved system consistent with Engineering Department requirements.

All plans, specifications, report or documents pertaining to erosion control, vegetation or re-vegetation shall be prepared or reviewed by certified professionals. Each of these documents shall be signed and stamped with a professional engineer seal, to indicate responsibility for them. A wet stamp is required on all documents except reproducible plans, where a stamp on the original is acceptable.

A "Preliminary Review" and or "Plans Approved for Construction" stamp or signature of the City on the plans does not in any way relieve the developer's engineer of the responsibility to meet all

requirements of the City. The plans shall be revised or supplemented at any time it is determined that the City's requirements have not been met. Generally, plans that are signed as being authorized for construction will not require revisions based upon subsequent revisions to these standards, however, when in the Engineering Department's opinion, a change to the project is necessary, based upon a significant change in the standards, which significantly affects public safety, future maintenance costs, or similar concerns, such a change may be required during construction by the City Engineer. Changes may also be required in the case where a developer does not proceed to construction within the time allowed in the agreement with the City.

1.10 REFERENCED SPECIFICATIONS

References to standards such as AASHTO, APWA or ASTM shall refer to the latest edition or revision of such standards unless otherwise specified.

1.11 CITY ENGINEER ACCEPTANCE

The City Engineer will not accept the land disturbance until all applicable requirements of these Standard's and of the City of South Jordan Municipal Code have been met.

1.12 METRIC UNITS

These standards do not contain metric conversions in some sections because of the extent of numerical data or information.

1.13 CONSTRUCTION SPECIFICATIONS

Nothing contained in the construction specifications in Appendix B, or in any other part of this standard as implying the City will pay for any of these improvements. In addition to the construction specifications being used for defining private development work, they are also used for City capital improvement projects, and therefore contain some language about methods of payment.

SECTION 2.0

DESIGN CRITERIA

2.1 INTRODUCTION

A. **General** - The City boundary includes the region generally east of the Oquirrh Mountains, south of 9400 South, west of the I-15 Freeway, and south to 11800 South. A map showing the City's boundary is contained in the standard drawings at the back of this document.

Within the boundaries of City of South Jordan there are several historical and environmental features, which have contributed to the past and present character of City of South Jordan. The Kennecott Copper Mine, the historical Bonneville Lake shoreline and the wetland areas scattered throughout the City of South Jordan area are just a few of these features.

These features also serve as winter rangeland for deer and elk and the wetland areas support several species of migratory birds. The educational and recreational experiences to be found in these areas are second to none. However, during the development surge in the late 1990's, City of South Jordan experienced several development related items, which appeared to threaten these unique areas, which have concerned City of South Jordan. The City of South Jordan recognizes that the preservation of the mountain ranges, wetlands and other sensitive areas, enhance the natural scenic beauty of the area and also sustains the long-term potential for maintaining property values. This philosophy also encourages quality development while maintaining the original identity and character of the sensitive areas that originally attracted people to the South Jordan area.

The sensitive areas spoken of also include elements, when balanced, provides environmentally sound ecological systems which prevent flooding, erosion and other natural hazards. For these reasons, the City Council has determined that in order to promote and protect health, safety, and welfare of the residents of the City of South Jordan and at the same time recognizing individual rights to develop private property, which will not be prejudicial to the public interest, it has been necessary to enact the standards and procedures contained herein.

The City's Engineering Division is responsible for all studies, design and construction for all land disturbance, grading, erosion control, re-vegetation efforts, and sedimentation facilities and the Public Works Department is responsible for all operations and maintenance once they have been accepted by the City.

B. **Design Professionals Qualifications** – A number of design professionals are involved in the land disturbance design and implementation phase of a project. These include civil engineers, geotechnical engineers, erosion control specialists, and other professionals necessary to properly design and inspect the project. The following are generalized list of work activities which require professional qualifications to perform:

1. Grading – Work under this item is required to be done by a combination of Civil Engineer and Geotechnical Engineer. These specialties are to be registered in the State of Utah. In addition to the design of a portion on the project, the engineer who performed the design is also to perform the inspection and verification of the

work and a certification is to be provided to the City indicating the work performed meets the requirements of the original design. If design changes are contemplated during construction, the design engineer is to approach the City with a proposed revised plan, which is to be reviewed and approved in writing by the City prior to initiating work on the revision.

2. **Drainage** – Work under this item is required to be done by a Civil Engineer. The Civil Engineer is to be registered in the State of Utah. In addition to the design of this portion on the project, the engineer who performed the design is also to perform the inspection and verification of the work and a certification is to be provided to the City indicating the work performed meets the requirements of the original design. If design changes are contemplated during construction, the design engineer is to approach the City with a proposed revised plan, which is to be reviewed and approved in writing by the City prior to initiating work on the revision.

3. **Erosion and Sediment Control, Vegetation and Re-vegetation** – Work under this item is required to be done by a qualified Certified Professional Erosion and Sediment Control Specialist or a person having adequate education and years of experience to indicate the person has sufficient knowledge to properly complete these types of designs and plans. The following general categories of persons may be considered qualified to perform this type of work. If through performance of the work it becomes apparent the individual does not possess the necessary knowledge to properly complete the work, the design firm will be requested to find another individual to complete the work or the City may require another firm be retained to complete the work.

   a. A person having at least ten years of professional level experience in the erosion and sediment control field and has been accepted for testing to become a Certified Professional Erosion and Sediment Control Specialist, or
   b. A Certified Professional Erosion and Sediment Control Specialist who is actively involved in designing, installing, or regulating projects within the erosion control field, or
   c. A Civil Engineer/Landscape Architect having at least six years of professional level experience in the erosion and sediment control field, or
   d. A Soil Scientist having certification by the American Registry of Certified Professionals in Agronomy and having two years of professional level experience in erosion and sediment control, or
   e. A person have a Bachelor of Science* degree plus six years of professional level experience in the erosion and sediment control field.
   f. A person with a Master of Science* degree plus four years of professional level experience in the soil erosion and sediment control field, or
   g. A person with a Ph. D* plus two years of professional level experience in the soil erosion and sediment control field.

   ***Note:** Degree in engineering (agricultural, civil, or environmental), geology, soil science, natural resource science or management, or a related field is acceptable.

Professionals, which are required to be licensed, are to be registered in the State of Utah. In addition to the design of this portion on the project, the professional who performed the design is also to perform the inspection and verification of the work and a certification is to be provided to the City indicating the work performed meets the requirements of the original design. If design changes are contemplated during construction, the design professional is to approach the City with a proposed revised plan, which is to be reviewed and approved in writing by the City prior to initiating work on the revision.

C. **Master Plan Compliance** – In designing facilities within the City, Developers and their engineers shall comply with the City's current master plans, the Land Disturbance Design and Construction Standards, Storm Drainage, Flood Control and Transportation master plans apply specifically, Parks and Trails, along with other master plans, which the City has adopted.

D. **Construction of the Project** – In planning for construction of the project, the Developer needs to take into account the amount of disturbance, which may impact the project and in what order will need to be created to construct the project. Strict controls need to be placed on the Developer's contactor to minimize the amount of disturbed soil and maximize the amount of natural vegetation preserved.

1. Project Phasing – Vegetation cover and associated roots of native plants provide tensile strength to the soil and reduce the potential for excessive erosion. When vegetation can be maintained in an undisturbed state, the amount of sediment coming off the site is minimal and the inclusion of structural/nonstructural Best management Practices (BMP's) is reduced.

   The construction project should be designed, selected and laid out so that it fits into existing land contours. Changing the contours significantly from existing grade will disturb more soil and increase development costs in grading, erosion control measures, sediment control and re-vegetation and will also disturb the atheistic value of the land.

   Clear and grub only those portions of the site where it is necessary for construction. The point to be emphasized is the less soil disturbed relates directly to reduced development costs.

2. Maximize the natural vegetation preserved - Preservation of natural vegetation on a site needs to be planned before the site disturbance begins. Preservation requires good site management to minimize the impact of construction activities on existing vegetation. The following is to be clearly indicated on the construction plans:

   a. Survey and stake the limits of disturbance (LOD) and have the City Inspector or Erosion Control Specialist review staking.
   b. Clearly mark the trees and shrubs not to be disturbed within the LOD.
   c. Create barriers to prevent the ground at the base of the trees and shrubs from being disturbed.
   d. Create natural vegetation buffer filter strips that are adjacent to roads and streams. The buffer filter strip width is to be designed based on

riparian habitat, vegetative growth and pollutants to be removed for the water. Each buffer requires a site-specific design refer to the B.M.P. buffer section for design criteria.

E. **Responsible Agencies** – The following are agencies with which the Developer will, or may need to coordinate during construction of the project:

1. Utah Department of Environmental Quality, Division of Air Quality – The Utah Department of Environmental Quality, Division of Air Quality is responsible for ensuring compliance with its requirements for all areas of the City. The Developer or his contractor is responsible for obtaining an air quality permit from this agency and is responsible for ensuring that operations of the project comply with the permit if the site is over one (1) acre.

2. Utah Department of Environmental Quality, Division of Water Quality – The Utah Department of Environmental Quality, Division of Water Quality is responsible for ensuring compliance with its requirements for all areas of the City under the Utah Pollution Discharge Elimination System (UPDES) requirements. The Developer or his contractor is responsible for obtaining a UPDES permit from this agency and is responsible for ensuring that operations of the project comply with the permit.

3. Utah Department of Environmental Quality, Division of Solid and Hazardous Waste – The Utah Department of Environmental Quality, Division of Solid and Hazardous Waste is responsible for ensuring compliance with its requirements for all areas of the City as it regards green waste or other solid waste. The Developer or his contractor is responsible for obtaining the necessary permits and approvals from this agency for the project and is responsible for ensuring that operations of the project comply with these permits.
4. City of South Jordan – City of South Jordan also has several ordinances and standards, which the Developer and his contractor need to be aware of and comply with. These include:

   a. Title 16, Chapter 44 - Land Disturbance Ordinance
   b. Land Disturbance Design and Construction Standards
   c. South Jordan City Design and Construction Standards

2.2 PRINCIPLES OF EROSION AND SEDIMENT CONTROL

A. **General** - Severe erosion is caused by the action of wind, rainfall, snow and runoff on bare soil. Clearing, grading, and other construction activities remove the vegetation and compact the soil, increasing both runoff and erosion. Excessive runoff causes gully erosion, increased stream bank erosion, poor water quality and results in increased off-site erosion, sedimentation, mudflows and flooding problems. Effective erosion and sediment control can be achieved by careful attention to the following principles:

1. Protect the land surface from erosion.

2. Manage runoff and keep water surface velocities low.

3. Capture sediment on-site.

4. Integrate erosion and sediment control with the construction schedule.

5. Inspect and maintain the erosion and sediment control practices before, during and after construction.

The following are principles for controlling erosion and off-site sedimentation from construction sites:

1. Fit the development to the existing topography, soils, and vegetation as much as is possible.

2. Schedule construction operations in order to minimize soil exposure during the wet season.

3. Minimize disturbance and soil exposure by retaining natural vegetation, adopting phased construction techniques, and using temporary cover.

4. Vegetate and mulch all denuded areas to protect the soil from winter rains. The primary efforts for controlling sediment pollution from construction sites are to minimize raindrop impacts on bare soil.

5. Utilize proper grading, barriers, or ditches to minimize concentrated flows and divert runoff away from denuded slopes or other critical areas.

6. Minimize the steepness of slopes and control the length of slopes by utilizing benches, terraces, contour furrows, wattles or diversion ditches.

7. Utilize riprap, channel linings, or temporary structures in the channel to slow runoff velocities and allow the drainage ways to handle the increased runoff from disturbed and developed areas.

8. Keep the sediment on-site by utilizing sediment basins, traps, or sediment barriers.

9. Monitor and inspect sites frequently to assure the measures are functioning properly and correct problems promptly.

B. Vegetation as a Solution

Dense, healthy vegetation and the associated leaf litter protect the soil from raindrop impact. Raindrop impact is a major force in dislodging soil particles, which then allows them to move down slope or form a crust on the soil surface. When a crust forms on the soil surface the rainfall infiltration rate decreases and runoff increases.

Vegetation also protects the soil from sheet and rill erosion. It shields the soil surface from the transport of soil particles and scour from overland flow (sheet flow) and it decreases the erosive energy of the flowing water by reducing velocity.

The shielding effect of the plant canopy and leaves is augmented by roots and rhizomes that hold the soil in place, improve the soil's physical condition, and increase the rate of

infiltration, further decreasing runoff. Plants also remove water from the soil through transpiration, thus increasing its capacity to absorb water.

Suitable vegetative cover provides excellent erosion protection, and reduces the need for high cost, low efficiency, and high maintenance sediment control measures. Vegetative cover is relatively inexpensive to achieve and tends to be self-healing; it is often the only practical, long-term solution of stabilization and erosion control on most disturbed sites.

Initial investigation of site characteristics and planning for vegetation stabilization reduces its cost, minimizes maintenance and repair, and makes other erosion and sediment control measures more effective and less costly to maintain. Permanent erosion control (post-construction landscaping) is also less costly where soils have not been eroded.

Exposed sub-soils are generally difficult to amend, are infertile, and require more irrigation. Natural, undisturbed areas can provide low-maintenance landscaping, shade, and privacy. Large trees increase property values when they are properly protected during construction.

Besides preventing erosion, healthy vegetative cover provides a stable land surface, reduces heat reflectance and dust, restricts weed growth, and complements architecture. The result is a pleasant environment for employees, tenants and customers, and an attractive site for homes.

Property values can be increased dramatically by small investments in erosion control. The final landscaping represents a small fraction of total construction costs, but can contribute greatly to an increased market value of the development. Healthy vegetation and planned development will reduce concentrated flows and peak discharge, thus reducing channel erosion and flooding. Good, healthy vegetative cover greatly reduces the environmental impacts that poor water quality and habitat reduction is having on rivers and streams.

C. **Scheduling**

1. Purpose: Following a specified work schedule that coordinates the timing of land-disturbing activities and the installation of control measures is perhaps the most cost-effective way of controlling erosion during construction. The removal of surface ground cover leaves a site vulnerable to accelerated erosion. Construction procedures that limit land clearing provide the timely installation of erosion and sedimentation controls, and restore protective cover quickly can significantly reduce the erosion potential of a site.

2. Design Considerations:

    a. Project design considerations: Design project to integrate into existing land contours. Significant re-grading of a site will require more costly erosion and sedimentation control measures and may require installation of on-site drainage and sediment control facilities.
    b. Incorporate existing natural areas: Inventory and evaluate the existing site terrain and vegetation. Disturbance of highly erosive natural areas (e.g., steep, unstable slope areas and watercourses) should be minimized,

while protecting other areas may enhance site aesthetics. Construction should not disturb theses areas

c. Avoid rainy periods**:** Schedule major grading operations during dry months of April through October. Allow enough time before rainfall begins to stabilize the soil with vegetation or physical means or to install temporary sediment trapping devices.

d. Practice erosion and sediment control year round**:** Erosion may be caused during dry seasons by "freak" rainfall, wind and vehicle tracking. Therefore, keep the site stabilized year-round, and maintain wet season sediment trapping devices. Material which becomes too dry and causes a dust problem will need to be wetted to meet City, County and State requirements.

e. Apply perimeter control practices: Protect the disturbed areas from off-site runoff and prevent sedimentation damage to areas below the development site by applying perimeter control devices.

f. Minimize soil exposed at one time: Schedule projects to disturb only small portions of the site at any one time. Complete grading as soon as possible. Immediately stabilize the disturbed portion before grading the next portion. Practice staged seeding in order to re-vegetate cut and fill slopes as the work progresses.

g. Trenching: Close and stabilize open trenches as soon as possible. Sequence trenching projects so that most open portions of the trench are closed before new trenching is begun.

h. Maintain erosion and sediment control during construction period, start to finish.

D. Land Grading for Minimizing Erosion

1. Purpose: Where land grading is necessary for road or building construction, these land-grading practices are intended to minimize the erosion potential and facilitate plant establishment.

2. Design Considerations: Design considerations should include the following:

   a. existing contours;
   b. land use;
   c. vegetation;
   d. soil;
   e. drainage;
   f. slope stability;
   g. slope length;
   h. slope angle;
   i. space limitations;
   j. erosion potential of land disturbance; and
   k. erosion and sediment control measure practicality.
   l. Existing or proposed wetlands

   Development should fit existing topography as much as possible so that land disturbance is minimized.

Slope steepness and excessive slope lengths should be kept to a minimum. Benches, steps, or contour furrows can be installed on long slopes to break up the slope length. A bench should be graded back towards the slope and drain with a gentle gradient to a stable outlet. Drainage from upland areas should be diverted away from exposed slopes.

E. **Minimize Disturbance and Buffer Strip**

1. Purpose: Erosion can be reduced ninety-eight (98%) percent by protecting the soil from raindrop impact. Existing native vegetation usually provides the best soil protection. One of the most effective erosion control measures is to only disturb areas immediately needed for construction.

   Water quality and wildlife habitat degradation can be greatly reduced by maintaining streamside buffer strips and riparian corridors. These buffer strips act to filter sediment from the surface runoff before it reaches the watercourse. The small drainage and intermittent streams and channels are the sediment delivery systems to rivers and lakes. If sediment can be kept out of the delivery systems, by maintaining buffer strips, then the sediment will not impact the fisheries or cause other water quality impacts.

2. Planning Considerations:

   a. Existing native vegetation should be incorporated into the final landscaping plan. It is adapted to the site, drought tolerant, and will provide shade and erosion protection. Shrubs or trees can be thinned and pruned for beauty and fire hazard reduction.
   b. Existing trees should be protected as per City ordinances or other development requirements.
   c. If the area is not disturbed then it does not require erosion control and concentrated flows down slope will be greatly reduced.
   d. Buffer strips around the perimeter of a site can reduce or eliminate off-site sedimentation.

3. Design Criteria:

   a. Designate areas of no disturbance. Clearly show on the SWPPP plans, and flag in the field areas of no disturbance and construction vehicle exclusion.
   b. Designate trees and shrubs that are to be preserved.
   c. Designate watercourse buffer-filter strips on the site design plan. See Guide to Small Roads, USDA-SCS for more information.
   d. Maintain and preserve riparian and naturally vegetated buffer strips along watercourses.
   e. The width of a buffer strip between a road and the stream is recommended to be 50 feet plus four times the slope of the land in percent, measured between the road and the top of stream bank. Coordinate with setback requirements for canal and channel setbacks.
   f. Buffer width in feet = 50 + 4(% slope).
      Example: For a 10% slope, buffer length is 50 feet + (4)(10) = 90 feet.

2.3 APPLICATIONS OF EROSION AND SEDIMENT CONTROL PRACTICES

A. **General** – The common reason erosion and sediment control practices are ineffective is that the wrong BMP is implemented for the type of control needed. A sediment control BMP should not be used for erosion control and an erosion control BMP should not be used when a runoff control is needed. When the needed control is treated with the wrong type of BMP, failure normally occurs.

For example, a silt fence is placed a cross a slope to prevent erosion. Maybe the designer wanted to stop sheet and rill erosion. In actual practice the silt fence collected and concentrated water, which was diverted to a low spot where the fence becomes overloaded and failed. An erosion control BMP should have been chosen to treat the erosion problem. Silt fences are intended for sediment control and should, therefore, be installed in relatively flat areas suitable for ponding water and depositing sediment. A good way to avoid confusion when choosing BMPs is to have a clear understanding of what type control is needed and what are the corresponding BMPs.

There are three general categories of controls that have distinct treatments associated with them;

1. erosion control
2. runoff control
3. sediment control.

B. **Erosion Control** - Erosion control is any practice that protects the soil surfaces and prevents the soil particles from being detached by rainfall or wind. Erosion control, therefore, is a source control that treats the soil as a resource that has value and should be kept in place.

What are some erosion control BMP's?

1. Key Point: The most efficient and economical long-term method of controlling sheet, rill and raindrop impact erosion is to establish vegetative cover from seed. Vegetation can reduce erosion by more than ninety (90%) percent by protecting the soil from raindrop impact and sheet erosion.

   When erosion control BMPs are implemented and maintained, the amount of sediment associated with runoff waters can be dramatically reduced. Whenever possible prioritize or design for erosion control first and sediment control second. Some important points to remember:

   a. Exiting or new vegetative cover is the primary erosion control practice.
   b. Retain existing vegetation by minimizing disturbance and scheduling large land disturbances during periods of expected dry weather.
   c. Establishing cover immediately after disturbance (staging) is important.
   d. Temporary erosion control is usually achieved by seeding and watering with fast growing annual grasses and/or protecting the soil with mulch or

erosion blankets. Plant seed mix is to be approved by the Engineering Department and the Parks Department staff.

e. Permanent erosion control usually involves planting perennial grasses, shrubs, and trees.

2. Key Point: The selection of the right plant material for the site, choosing the correct mulching technique and proper seedbed preparation are critical for effective erosion control. Surface roughening, contour furrows, and stepped slopes are essential to establish vegetation. Straw bales are not recommended in the city.

3. Costs - Non-structural erosion control practices are generally more cost-effective than sediment control. For example, the cost of temporary seeding one acre would be comparable to the cost of installing 200 LF of silt fence (for a 1 acre drainage) or equivalent to the cost of constructing a temporary sediment trap designed for a one-acre drainage. However, the practice of temporary seeding would probably be more effective, while the silt fence and sediment trap will require regular and costly maintenance.

4. Key Point**:** Erosion control is, generally, more cost-effective than sediment control and requires less maintenance and repair.

C. **Runoff Control (See Appendix A - 5200)**

1. General - Construction activities usually result in the removal of vegetative cover and increases in impermeable surfaces, both of which increase the volume and velocity of runoff. Increases of storm water volume and velocity lead to increased erosion (gulling) in the sediment transport and off-site delivery (sedimentation). These increases must be addressed when implementing erosion and sediment control.

   Runoff control measures are those practices, which mitigate for the erosive and sediment transport forces of storm water during and after construction activities. Some examples of runoff control might include, outlet protection (energy dissipators), diversion dikes and swales, temporary slope drains, rock lined channels, turf reinforcement mats, grass-lined channels, and temporary stream crossings.

2. Key Point: Runoff control involves the use of structures to reduce velocities and/or safely carry storm water in a manner, which reduces erosion and sediment transport.

   The energy equation, **E = mv2**, where E = erosive Energy, m = unit density of water, and v = the runoff velocity, demonstrates that if you reduce the velocity of running water by 1/2 you will reduce the erosive energy by 4 times. To reduce runoff energy implement practices which use the **4 D's**.

   Decrease - decrease the amount of runoff
   Detain - decrease the velocity
   Divert - divert runoff to less erodable areas
   Dissipate - spread the runoff out

Rill and gully erosion is caused by concentrated runoff. Methods that reduce runoff velocity, such as check dams, vegetated channels or riprap, will also reduce the potential for sediment transport. An alternative to reducing the runoff energy of storm water is to convey that runoff through or along non-erodable surfaces, i.e., culverts and slope drains.

3. Key Point: Temporary check dams, especially straw bale dams, are not recommended for any flowing water conditions. Straw bales and silt fences are sediment control BMP's, not runoff control BMP's and should not be placed in channel flow (runoff) areas.

   What are some runoff control BMP's?

D. **Sediment Control (See Appendix A – 5300)**

1. General - Sedimentation is the deposition of soil particles that have been transported by water or wind. The amount of sediment produced during construction is directly proportional to the degree and effectiveness of erosion control practices implemented. The quantity and size of the particles transported increases with the velocity of the runoff or wind.

   Sediment control is used to keep sediment, the product of erosion, on-site. Sediment control involves the construction of structures that allow sediment to settle out of suspension. Sediment control structures, therefore, require frequent inspection and maintenance. Generally, sediment is retained on-site by two methods: a) slowing runoff velocities, as they flow through an area, sufficiently so that sediment cannot be transported, and b) impounding sediment-laden runoff for a period of time so that the soil particles settle out.

   Sediment controls are not filters. Practices referred to as "sediment filtering" actually works by slowing water velocities and allowing sediment impoundment to de-water in a very slow and controlled manner. For effective sediment control planning and design, materials such as geotextiles, silt fences, straw wattles and straw bales should be considered for their ability to impound water and slow runoff velocities, not for their ability to "filter" sediment.

2. Key Point: Effective sediment control involves ponding sediment-laden runoff long enough for the soil particles to settle out of suspension. Reducing runoff velocities will also reduce sediment transport and thereby help retain sediment on-site.

   What are some effective sediment control BMPs?

3. Key point: Structural sediment control can be divided into three general types; 1) sediment basins, 2) sediment traps, and 3) sediment barriers.

   a. Temporary sediment basins are recommended for the outlet of disturbed drainage areas ranging from 5 ac. to 100 ac. , see Appendix A 5332. Sediment basins should be designed by a qualified professional.

b. Temporary sediment traps are recommended for disturbed drainage areas less than 5 ac. A typical sediment trap designed to handle 0.5-inches of runoff over a 24 hour period would require a settling zone capacity of 67 yd3 / ac. of contributing drainage area and a sediment storage capacity of 33 yd3 / ac. of drainage area.

(1) Excavated sediment traps require less rigorous design work, are smaller in size and they are easier to construct, therefore, a preferable alternative is to sub-divide large projects into smaller sub areas (less than 5 ac) and utilize numerous sediment traps. Multiple traps and / or additional volume may be required to accommodate site specific rainfall and soil conditions. This approach may facilitate phased construction along relatively narrow highway right of way.

(2) Excavated storm drain inlets are small excavated sediment traps located at storm drain inlets are effective as part of phased construction. The design capacity of excavated inlet sediment traps shall be 67 yd3 / acre of contributing drainage area. These excavations are temporary and they are not very effective for trapping small particles (silt and clay) and they should not be used where runoff velocities are high.

c. Sediment barriers are BMP's that are intended to separate sediment from sheet flow runoff. They function by reducing runoff velocity and ponding small quantities of storm water. Sediment barriers are only intended for areas experiencing sheet flow and they must be installed in areas that can pond water and accumulate sediment and, most importantly, the must be accessible for cleanout. Sediment barriers are the most common type of practices used on construction sites. The most common types of sediment barriers are as follows:

(1) Silt fence
(2) Straw bale dike
(3) Continuous berms
(4) Storm drain inlet barriers
(5) Straw wattles

2.4 BIOENGINEERING TECHNIQUES

A. **General:** Bioengineering uses plants and structures to function together in mutually reinforcing or complimenting roles. The structural components initially protect and stabilize the site and create a stable zone for the plants to grow.

Bioengineering techniques are used to prevent erosion on upland slopes, to protect stream banks and channels against wave erosion in the coastal zones, or water quality ponds and these biotechnical earth support methods can also be utilized to provide slope stability.

B. **Conditions Where Practice Applies:** Soil bioengineering techniques are generally appropriate for:

1. Slopes to prevent surface erosion

2. Cut and fill slopes stabilization
3. Shallow mass wasting
4. Gully repair
5. Stream bank stabilization
6. Shoreline stabilization
7. Wetland mitigation
8. Watershed rehabilitation

C. **Planning Considerations:**

1. Soil bioengineering generally requires minimal access for equipment and workers and cause relatively minor site disturbance during installation. These practices are therefore considered appropriate for environmentally sensitive areas, such as parks, woodlands, riparian areas and scenic corridors where aesthetic quality, wildlife habitat and similar values may be critical.

2. Bioengineering systems are often more cost effective than the use of vegetation or structural solutions alone. Using indigenous materials accounts for some of the cost effectiveness because plant costs are limited to labor for harvesting, handling and the direct costs of transporting plant material to the site.

3. In bioengineering, the plant material itself may provide both the structural and vegetative components of the design. For example, in willow wattles, live staking and brush-layering the woody material is used to provide initial structural protection and later, vegetative cover.

4. Bioengineering systems are most effective when installed during the dormant season, usually late fall, winter or early spring. Constraints on planting times or availability of the required quantities of suitable plant materials during allowable planting times may limit the usefulness of bioengineering methods.

5. Bioengineering systems are strong initially and grow stronger with time as the vegetation becomes established. Bioengineering systems may withstand heavy rainfalls immediately after installation. Even if vegetation dies, its plant material and surface residue continues to play an important protective roll during vegetation establishment.

6. Soil bioengineering is useful on small, highly sensitive or steep sites where the use of machinery is not feasible.

7. Bioengineering practices are limited by the available medium for plant growth-rocky or gravelly slopes may lack sufficient fines or moisture to support plant growth or hard pans may prevent the required root growth. Adequate natural precipitation may also limit the applicability of bioengineering techniques.

D. **Design Criteria:** Choose plant materials that are adapted to the site conditions. Local stands of willow or other suitable species are already well suited to the climate, soil conditions and available moisture and they make good candidates for survival on most sites.

When choosing live willow material for bioengineering applications, remember that young (less than 1 year old) wood or suckers will often sprout easier under optimum conditions, but healthy, older wood (1 to 4 years old) has greater vegetative (energy) reserves necessary to consistently sprout and the older wood is much stronger. If possible, mix younger wood with older wood for the bioengineering application such that a majority of the material is 1 to 4 years old.

Research indicates that all cuttings should be soaked for a minimum of 24 hours, whether they are stored or harvested and immediately installed (Hoag 1991; Hoag et al. 1991; Hoag et al. 1992). Some research recommends soaking the cuttings for as much as 10 to 14 days (Briggs and Munda 1992; Frenchel et al. 1988).

E. **Bioengineering Measures:** The following practices have specific construction recommendations in this manual. For more information of these practices refer to the appropriate BMP.

1. Vegetated rock gabion: Is a structure built of metal wire baskets filled with rock and soil. These structures are then inter-planted with woody plant material. See Appendix A - 5405

2. Straw rolls: Are long bags or nets filled with straw or similar material. They are placed along the contour of a slope or stream bank in order to reduce erosion and sedimentation. Commonly uses wood or live stakes to anchor the roll in place. See Appendix A – 5250.

3. Live stake planting: Live stake planting is the planting of live, rootable, vegetative cuttings into the ground. See Appendix A - 5220

4. Branch-packing: Consists of alternative layers of live branch cuttings and compacted backfill to repair small-localized slumps and holes in slopes.

5. Brush-layering: Cuttings or branches are layered between successive lifts of soil fill to construct a reinforced slope. See Appendix A – 5200.

6. Willow Wattles: Are woven bundles of woody branches typically from a species that is very rootable. This bundle is place along the contour of a slope or stream bank in order to reduce the length of the slope and provide vegetation as a buffer zone. They commonly have wood or live stakes to anchor the wattle in place. See Appendix A – 5260.

7. Coir rolls: Fiber filled mesh logs used to stabilize shorelines, stream banks and wetlands. Coir rolls resist stream bank and wave erosion and provide a stable substrate for plant establishment. See Appendix A – 5250.

8. Coir mats: Coir mats are dense, biodegradable mats are usually made of coconut fiber (coir), used to protect stream banks and wetland shores from erosion, trap sediment and provide a stable substrate for wetland plants. See Appendix A – 5210.

F. **Inspection and Maintenance:** Regular inspection and maintenance of bioengineering installations should be conducted, particularly during the first year. Prompt correction of

any failures is essential to prevent major problems from developing. For the first 3 months, weekly inspections need to be made. After the three-month period, inspections can go to every two weeks for tow months, and then every mother thereafter.

2.5 SUBDIVISION AND LOT DESIGN FOR GRADING AND DRAINAGE

A. **General** – The City's basic philosophy of subdivision and lot design for grading and drainage is that the lot is to be so designed that the lot drainage be directed toward the street for disposal by the City's storm drainage system without negatively impacting lots by abrupt changes in grade. It is also the City's philosophy to have each lot graded so as to maximize the amount of infiltration of storm water into the individual lot without increasing the potential for damage to structures constructed on the lot. Designers of subdivisions are also to include features on each lot, which prevent wherever possible, the cross-drainage of one lot to another, except in dedicated drainage easements. Where storm water drainage cannot be directed toward the public street, the designer is to provide for a subdivision level drainage system which is a private drainage system in the side and/or rear yards which provide for cross-lot drainage. Subdivision level storm water is to be disposed of to an approved storm water facility, which is to be approved by the City Engineer.

B. **Preliminary Design Report** - The developer is responsible for preparing a preliminary design report for this portion of the work and submitting it to the Engineering Department for review and approval, prior to proceeding forward with final design. The preliminary design report shall include preliminary information on geological, geotechnical and soils related issues related to the specific project. It shall also include preliminary information regarding the proposed storm drainage system for the project indicating how the applicant intends to grade the lots, streets and other portions of the project to address storm water runoff for the entire project. The intent of the preliminary design report is to provide sufficient information for general approval by the City prior to proceeding to final design. One of the purposes of this report is to streamline the development process by minimizing the need for costly revisions to the designs by involving the City early in design procedures. The applicant is to receive approval of the report prior to proceeding to final design.

C. **Grading and Drainage Report** - The developer shall prepare a grading and drainage report which is to include plans for storm water management, erosion control, and grading describing the methods by which surface water, natural drainages, flooding, erosion and sedimentation loss, and hydrologic hazards will be controlled during and after construction. The plan shall include:

1. Stamps and Signatures of Licensed Professionals – The report is to include the stamps and signatures of the registered professionals who have prepared the report. Their stamps and signatures shall be affixed to the first interior page of the report. The professionals preparing this report are to be licensed professionals in the State of Utah for their respective professions. Those preparing the report shall include: a licensed civil engineer for the grading and drainage portions of the project, a certified erosion control specialist for the erosion and sedimentation loss portions of the work. The City may accept other professionals who have had at least 6 years experience with erosion and sedimentation loss for this portion of the report including landscape architects and civil engineers. The City reserves

the right to accept or reject qualifications of professionals proposed to prepare the report.

2. Grading Plan – The report is to include a grading plan for the project. This plan is to show present and proposed topography to include elevations, lines and grades including the location and depth of all proposed fills and cuts of the finished earth surfaces using a contour interval of one or two feet.

3. Graded Area – The report is to include the proposed area to be graded, which is to be clearly delineated on the plan. Identify depths of cuts and fills. Also, identify finish floor elevations of all structures and show those elevations on the plans.

4. Drainage and Erosion Calculations and Details; Hydrologic Hazards – The report is to include all assumptions, information, calculations and proposed details used for design and construction of debris basins, impoundments, diversions, dikes, waterways, drains, culverts and other water management or soil erosion control measures shall be shown. Drainage calculations shall determine runoff volume and peak discharge using the "Rational Method",

   "SCS Curve Number Method", or appropriate equivalent. Data provided is to include:

   a. Rainfall depth, duration and distribution
   b. Watershed slope and drainage area delineation
   c. Land condition or watershed surface
   d. Existing and proposed topography of the drainage area
   e. Description of soil conditions of watershed. Erosion calculations are to employ predictions of soil loss sheet erosion using the Universal Soil Loss Equation or appropriate equivalent. Data to be provided should include factors of:

      (1) Rainfall intensity and duration. See South Jordan City Standards.
      (2) Soil erodibility
      (3) Land slope and length of slope or topography
      (4) Condition of the soil surface and land management practices in use
      (5) Surface cover, grass, woodland crops, pavements, etc.

5. Erosion Control During Construction – The grading and drainage report will be prepared by the developers engineer in which he will describe the methods intended to be employed to control the erosion and sedimentation increase while in construction.

6. Interim Stabilization during Construction – The developer/builder is responsible for interim stabilization of all disturbed areas during the period of construction to prevent erosion offsite effects and for final stabilization once construction is completed. The report prepared will address these issues.

7. Limit of Watershed/100-Year Flood Plain Maps – The report is to include maps of the development site (1"=200'), which define the boundaries of any 100-year flood plain and the limits of the watershed.

8. Existing Drainage Channels/Permits – The report shall include a separate map, which indicates the historic drainage channels associated with the project. Existing drainage channels shall remain as historically located except that roads and utilities may be installed across such channels as approved by the Planning Commission. Where these channels must be modified, permits must be obtained from Salt Lake County Flood Control, applicable canal companies, the Utah Division of Water Rights, as appropriate, and the US Corps of Engineers, as applicable. The developer shall provide copies of approval letters to the City. Structures and or lots shall be arranged so as to insure adequate setbacks from all drainage channels based upon the100-year storm.

9. Storm Water Collection Facilities – The report shall show any existing and proposed storm water collection facilities associated with the project. Storm water and sediment collection facilities shall be required to be constructed on development sites in accordance with the following:

   a. Such facilities shall be the first improvements or facilities constructed on the development site.
   b. Such facilities shall be designed to detain the storm water flows, including sediment loads, of a 10-year storm while allowing offsite discharge not to exceed 0.2 cubic feet per second per acre.
   c. Such facilities shall be so designed as to divert surface water away from cut faces or sloping surfaces of a fill.
   d. The existing natural drainage system will be improved as required by the City.
   e. Where drainage channels are required, wide shallow swales lined with appropriate vegetation, rock, or other approved material are to be used instead of cutting narrow, deep drainage ditches.
   f. Flow retarding devices, such as detention ponds, check dams and recharge berms are to be used where practical to minimize increases in runoff volumes and peak flow rates due to development.

10. Minimize Disturbance of Vegetation Cover – The Developer is to indicate in the report how he intends to minimize the disturbance of vegetative cover within the project. Construction of the development shall be such that it minimizes the disturbance of vegetation cover.

11. Erosion Control Measures to Reduce Suspended Solids – The report to be prepared is to indicate the erosion control measures, which will be employed at the site, during construction and for the long-term. Erosion control measures on the development site shall be required to minimize the increased suspended solids loading in runoff from such areas. A drainage system shall be designed to control storm water erosion during and after construction.

12. The report shall indicate that no grading or stripping is to be permitted unless the appropriate equipment is used and except as part of a development plan approved by Engineering and the Planning Commission

13. Hydrologic Hazards - A description of any hydrologic hazards associated with the proposed site and adjacent area is required and are to be discussed in the report. Hydrologic hazards might include high water table, surface water impoundments, gradient of the property, flood plains, etc.

D. **Final Design Report** - The developer is responsible for preparing a final design report for this portion of the work and submitting it to the City for review and approval, prior to the approval of the land disturbance permit. The final design report shall include the preliminary design report, the geotechnical report, the grading and drainage report and the final grading design and design of the subdivision drainage facilities related to the erosion and sediment report indicating the BMP's to be used for a specific project. The intent of the final design report is to provide sufficient information to the City to obtain their approval prior to proceeding with the preparation of plans and specifications.

E. **Subdivision Design for Grading and Drainage** – Each subdivision is to be designed to provide a subdivision level drainage system. This subdivision level drainage system is to be composed of both public and private drainage facilities. The public drainage systems are to be located within the City's street right-of-ways and other fee parcels and the private systems are to be located within easements which are to be controlled by easement restrictions and covenants, codes and restrictions (CC&R's), and enforced by private agreements or through neighborhood associations. Drainage facilities located within private easements are not being considered as City responsibilities unless approved by the City Engineer.

In cases where lots cannot be graded to allow for the total amount of storm drainage to go to the streets, the designer shall provide for side yard and rear yard drainage facilities, which will convey individual lot drainage from each, lot and dispose of it properly. All attempts are to be made to drain individual lot storm water to the street.

F. **Lot Design for Grading and Drainage** – Each lot is to be designed to provide for drainage into the subdivision level drainage system. This lot level drainage system is to be composed of private drainage facilities, i.e. grass-line swales, grading to allow drainage toward the street, rear yard storm water drainage facilities to pass water from one lot to another, etc. The private drainage systems are to be located within dedicated easements, which are to be administered and controlled by private parties. Drainage facilities located within private easements are not to be considered as the City's responsibility.

In cases where lots can not be graded to allow for the total amount of storm drainage to go to the streets, the designer shall provide for side yard and rear yard drainage facilities which will convey individual lot drainage to the subdivision level storm water drainage system. All attempts are to be made to drain individual lot storm water to the street.

No streets with cul-de-sacs are allowed unless measures are approved by the City Engineer. The facilities must meet minimum standards of the building codes as well.

G. **Structure Design for Drainage** – All attempts need to be made to divert lot level storm drainage to he public right-of-way. This includes all impervious surface areas on each lot including roof drains, driveways, and other impervious surfaces. In the case of roof drains, the designer of the subdivision and lot are to provide for roof drainage discharge

to the public street, wherever possible. The lot designer must provide for facilities to convey this type of storm water from the downspout to the curb and gutter by overland flow. The City will not allow the boring or cutting of curb and gutter to installation of piping systems for this purpose. The Engineering Department and Building and Safety Division are to review and approved these measures.

2.6 CLEARING, GRUBBING AND STRIPPING (See Appendix B – Section 02112)

A. **General** – All clearing, grubbing and stripping work to be completed shall first be designed by a registered Geotechnical engineer and approved by the City. It consists of clearing of all structures, trees, brush and other organic and deleterious materials from the project site so that excavation and grading can begin. In preparing for this phase of work, the Developer needs to know that only certain options are open for disposing of material cleared from the site. The Developer or his contractor must obtain prior approval of the process requested.

During the clearing, grubbing and stripping work if the soils and/or vegetation indicate the area is a wetland, all work will cease at no cost to the City, until mitigation plan can be reviewed by the Army Corp of Engineers or the Natural Resource Conservation Service (NRCS).

B. **Vegetative Material Disposal** - For trees, brush and other vegetative materials only the following disposal options are approved:

1. Burn the material – This is an option but a number of agencies will need to be consulted and permits obtained prior to using this method. Permits/approvals will need to be received from:

   a. South Jordan Fire Department (WJFD).
   b. State of Utah, Department of Environmental Quality, Division of Air Quality (DEA)
   c. State of Utah, Department of Environmental Quality, Division of Water Quality
   d. City of South Jordan, Community Development and Engineering departments
   e. Other agencies as needed.

2. Haul material to an approved landfill – This option will require that the Developer collect all vegetative material and haul it to a City approved landfill. The Developer will need to provide evidence that a landfill will accept the material and then evidence must also be provided which indicates the material was actually deposited at said landfill. The City must approve this method and destination prior to the Developer proceeding with this work.

3. Chip and shred the material – If the Developer selects this disposal option, all vegetative materials will need to be disposed of through a mechanical chipping/shredding process. The machine to be used shall be a tub grinder through which all material shall be processed. Once the vegetative material has been processed through the tub grinder, the material will be evening distributed across the topsoil it is to be mixed into and thoroughly mixed. See Appendix B – Section 02112.

The Developer and his contractor are hereby put on notice that any deviations from these three processes will result in the Developer and his contractor removing the material from where it has been deposited and properly disposing of the material. Disposal of the material by cutting it, running a tracked bulldozer over it to crush it and then mixing it with soil and disposing of the material on site is illegal and unacceptable. The use of such unapproved methods will be reported to the State of Utah, Department of Environmental Quality, Division of Solid and Hazardous Waste who also has jurisdiction of illegal landfills.

C. **Man-made Materials Disposal** - For all man-made materials, such as processed wood, concrete, dry wall, adhesives, etc., only disposal at an approved landfill site is acceptable. The Engineer shall design the work covered under subsection 2.2 to meet the following technical specification section:

1. Section 02112. – Clearing, Grubbing and Stripping

D. **Topsoil** – The topsoil contains valuable native seeds that commonly are not available to include in a native re-vegetation seed mix; an example is the State's native flower Sego Lily. Therefore, the construction plans should clearly identify the locations of the topsoil stockpile areas.

The Developer's engineer should use the project geotechnical report to determine the area required to stockpile the topsoil. To minimize the handling of the topsoil, construction sequencing should also be used in determining the topsoil stockpile locations. The construction should be clearly indicated.

1. Stockpile locations indicate by drawing a line around the area and adding a distinctive pattern within the area.

2. Sediment controls used to keep the topsoil from contaminating the surrounding areas.

3. Erosion controls to prevent wind, water, snow and ice erosion.

2.7 DUST CONTROL

A. **General** – The Developer is responsible for controlling the dust produced at his project and shall provide the necessary mitigation to keep the dust to the acceptable limits identified in the air quality permit obtained from the State of Utah, Department of Environmental Quality, and Division of Air Quality. Ignorance of these codes and statutes is not an acceptable reason for not complying with these requirements.

2.8 GRADING AND EXCAVATION

A. **General** – All grading work shall be done under the City's supervision, which shall include an engineering geotechnical consultant, retained and paid by the City and reimbursed by the Developer. The consultant shall be answerable to the City only.

B. **Grading** – All grading work to be completed shall first be designed by a registered geotechnical engineer and approved by the City. As part of the approval process, the

Developer shall prepare plans and specifications for the project, which identify existing topography and geology and indicate methods and processes to be used in doing the grading. Once the City has approved the work, a geotechnical engineer shall have a representative on site at all times grading is being done and must oversee grading. The geotechnical engineer shall be retained and paid by the City and reimbursed by the Developer to the City. Once work has been completed, the Developer engineer shall prepare record drawings indicating the 'as-constructed' condition of the work.

The Engineer shall design the work covered under subsection 2.8 to meet the following technical specification sections:

1. Section 02200 – Earthwork

2. Section 02210 – Site Grading

C. **Excavation** – Excavation shall be performed to the lines and grades indicated on the Contract Documents. During excavation, material satisfactory for backfilling shall be stockpiled in a safe manner. Excavated material not required or not satisfactory for backfill shall be removed from the site. Excavation shall be braced and supported as need to prevent the ground, adjacent to the excavation, from sliding or settling. Localized slides or settlements shall be promptly removed and corrected by the Contractor.

1. Requirements. All land disturbance related construction, that a Land Disturbance Permit is required, or work shall have the land disturbance permit available on-site and shall be subject to inspections by authorized employees of the City, and certain types of work to be determined by the City Engineer shall have either continuous or constant inspection and supervision by a registered civil engineer, and/or other appropriate consultants, soils engineer, and engineering geologist as a condition of the issuance of the land disturbance permit. Prior to issuing a stamped and signed grading certificate by the civil engineer responsible for the grading operation, a final inspection shall be made of all construction or work for which a land disturbance permit has been issued.

2. Exposure of work. Whenever any work on which inspections are required, as specified in this section, is covered or concealed by additional work without having first been inspected, the Construction Manager may require, by written notice, that such work be exposed for examination. The work of exposing and recovering shall not entail expense to the City.

3. Notices. The land disturbance permit holder or his agent shall notify the Construction Manager twenty-four (24) hours in advance of the time when the grading operation is ready for each of the following inspections:

   a. Initial inspections. When the land disturbance permit holder is ready to begin work but before any clearing and grubbing is started;
   b. Toe inspections. After the natural ground is exposed and prepared to receive fill but prior to the placing of any fill. Approval for placing fill shall not be made until all debris and unsuitable material has been removed from the site to an approved location;
   c. Sub-drain inspections. Inspections shall be required on all sub-drains after the installation but prior to the placement of any fill;

d. Excavation inspections. After the excavation is started but before the vertical depth of the excavation exceeds ten (10') feet;

e. Fill inspections. After the fill emplacement is started but before the combined vertical height of the lift exceeds ten (10') feet;

f. Drainage device inspections. After the forms, steel reinforcement, and pipe are in place but before any concrete is placed;

g. Rough grading. When all the rough grading has been completed. This inspection may be called for at the completion of the rough grading without the necessity of the City Engineer having previously reviewed and approved applicable reports;

h. Rough grading certification. A conditional interim certificate may be issued to the City Engineer to allow the issuance of building permits. This certificate shall in no way exonerate the applicant from completing the grading;

i. Final certification. When all work, including the installation of all drainage structures, other protective devices, the compaction of trench backfill, and planting and slope stabilization, has been completed and the "as built" plan and required reports have been submitted;

j. Other inspections. In addition to the called inspections provided by this section, the City Engineer may make any other inspections of any work to ascertain compliance with the provisions of this chapter and other laws; and

k. Interrupted grading. When the land disturbance permit holder is ready to resume work, but before any grading or brushing is started, the land disturbance permit holder or his agent shall notify the Construction Manager twenty-four (24) hours in advance of the time when the grading operation is ready.

4. Certification. The Developer's Engineer shall certify to the City Engineer, upon the completion of the grading work, that all grading work has been done in compliance with all approved grading plans and reports and that all applicable Building Code regulations shall be administered by the office of the Building Official thereafter.

5. Issuance of certificates. Upon the final inspection when it is found that the work authorized by the land disturbance permit, including the installation of all drainage structures, has been satisfactorily completed in accordance with the requirements of this chapter, a grading certificate covering such work shall be issued by the Developer's Engineer to the City Engineer.

6. Final reports. Upon the completion of the work, the City Engineer may require the following reports and information:

a. A report from a registered civil engineer certifying that all grading, lot drainage, and drainage facilities have been completed in conformance with the approved plans and the provisions of this chapter and that the graded site will support residential or commercial type structures, whichever is applicable;

b. A soils engineering report including, but not limited to, certification of the soil bearing capacity, summaries of field and laboratory tests, locations of tests, expansive soil classification lot by lot, and slope tests

taken in the fills showing the limits of compacted fill on an "as built" grading plan;

c. An engineering geology report by the engineering geologist, based on the final contour map, including specific approval of the grading as affected by geological factors. Where necessary, a revised geologic map, cross sections, and any recommendations necessary shall be included; and

d. When "as built" grading plans are required, as determined by the City Engineer, such plans shall be signed by the supervising civil engineer, the soils engineer, and the engineering geologist, when applicable, for their portions of the work.

e. Electronic copy of detention basins with volumes and calculations.

The Engineer shall design the work covered under subsection 2.4 to meet the following technical specification section:

1. Section 02222 – Excavation and Backfill for Structures

D. **Fills** – All work performed under this item shall be under the direct supervision of a registered geotechnical engineer. The Developer shall be responsible for design and obtaining approval of the design from the City, prior to proceeding with construction. A geotechnical engineer shall also have a representative at the site during all times work is being performed on this work. The geotechnical engineer and his staff shall be retained by the City and directly paid for by the City from a deposit for this work from the Developer. The Contractor shall comply with these design and construction standards and the Contract Documents for the project in constructing the work.

1. Height. No finished fill slope shall exceed a vertical height of twenty-five (25') feet unless approved by the City Engineer and Planning Commission. If a fill slope is permitted above such height, a horizontal terrace with a minimum width of twenty-five (25') feet may be required to be installed at each one hundred (100') feet of vertical height, and intervening terraces also may be required.

2. Slope. No fill shall be made which creates any exposed surface steeper in slope than three (3) horizontal to one vertical. Exceptions are:

a. The City Engineer may authorize a fill slope which is steeper in slope than two (2) horizontal to one vertical and is less than six (6') feet in height, if:

(i) The applicant can demonstrate that because of special circumstances applicable to the property, including size, shape, topography, location, or surroundings, the strict application of this section would deprive such property of the ability to be reasonably developed; and

(ii) The applicant produces sufficient data from a soils engineer, an engineering geologist, and a landscape architect to demonstrate that the material of which the slope is composed and that the material underlying the slope is capable of permanent stability on a steeper slope, and that the required slope planting can be adequately maintained.

3. Unstable material. The City Engineer may require that the fill be constructed with an exposed surface less than three (3) horizontal to one (1) vertical if, under particular conditions, such flatter surface is necessary for stability or safety.

4. Fill slope limits. Toes of fill slopes shall not be made nearer to a project property boundary line than one-half (1/2) of the height of the fill but need not exceed a horizontal distance of twenty (20') feet. Fill slopes shall not be divided horizontally by property lines, and fill slopes occurring on a side or rear lot line shall be made a part of the downhill lot. If the City Engineer determines such requirement is unnecessary because of special conditions, he may make adjustments as a condition of the land disturbance permit.

5. Intervening terraces. Terraces shall be paved (reinforced concrete or gunite) terraces, shall have a minimum width of six (6') feet, shall be extensively landscaped in accordance with an approved landscaping plan, and shall be spaced at vertical intervals of twenty-five (25') feet; provided, however, for slopes less than forty (40') feet in vertical height, the terraces shall be approximately at mid-height. For slopes less than three (3) horizontal to one vertical, or where soil conditions require additional intervening terraces may be required.

6. Compaction. All fills shall be placed, compacted, inspected, and tested in accordance with the provisions of this subsection. If the strict enforcement of the provisions of this subsection is determined by the City Engineer to be unnecessary because of the proposed or probable use of the land, he may waive the requirements. The requirements of this subsection shall not be waived when structures are to be supported by the fill, or if the fills are being placed in areas to be designated as hillside, or where they are necessary as a safety measure to aid in preventing the saturation, settling, slipping, or erosion of the fill.

   a. The natural ground surface shall be prepared to receive fill by removing vegetation, non-complying fill, topsoil, and/or porous, compressible soil. Where natural slopes are five (5) horizontal to one (1) vertical or steeper, and the height of the fill is twenty (20') feet or greater, benching into sound bedrock or other competent material shall be required. Fill slopes, which toe on natural slopes, shall be provided with adequate drainage.
   b. No deleterious material shall be permitted in fills. Except as otherwise permitted by the City Engineer, no rock or similar irreducible material with a maximum dimension greater than eight (8") inches shall be buried or placed in fills.
   c. Upon recommendations made by a soils engineer and approved by the City Engineer prior to the grading of any project, rock with dimensions from eight (8") inches to thirty-six (36") inches may be placed in compacted fill. Such oversized rocks shall not be in the upper ten (10') feet of compacted fill or nearer than twenty (20') feet to the surface of any fill slope. Such rock areas shall be shown on "as built" plans and certified to be compacted by the soils engineer.
   d. The fill shall be spread in a series of layers, each not exceeding eight (8") inches in thickness, and shall be compacted by an approved method after each layer is spread.

e. The moisture content of the fill material shall be controlled at the time of spreading and compacting to obtain the required relative compaction and avoid excessive pore pressure as the fill increases in depth.

f. All fills shall be compacted to a minimum of ninety (90%) percent (unless under roadways) of the maximum density as determined by ASTM D 1557-66T, Method A or C, modified to three (3) layers. If the required degree of relative compaction cannot be attained on sloped surfaces, the slope shall be cut back until the compacted inner core is exposed.

g. The field density shall be measured in accordance with the procedure specified in ASTM D 1556-58T, or a later revision, using the optional base plate and making a suitable adjustment for volumes of rocks in the test hole or other approved testing methods giving equivalent test results.

h. A field density test, as set forth in this subsection, shall be taken for each eighteen (18") inches of fill, or portion thereof, measured vertically from the lowest point of the area to be filled, or for each one thousand (1,000) cubic yards of fill placed. In addition, in the case of subdivisions, at least one field density test shall be taken on each lot, which receives fill.

i. All fills regulated by the provisions of this chapter shall be tested for relative compaction by the soils engineer. A certificate of compliance with the terms of this section and the land disturbance permit, setting forth densities, relative compaction, the expansive soil report, allowable bearing value, and other soil characteristics, shall be prepared and signed by the soils engineer. The Developer is responsible for paying for these tests. Such report shall be submitted to, and be approved by, the City Engineer before any final approval of the fill is given and before any foundation construction begins.

j. If building is not commenced within one year following the final certification and approval by the City Engineer, a reevaluation as to the adequacy of the intended use and a report shall be filed with the City Engineer for approval. Such report shall contain data on compaction, stabilization, and expansive soils.

7. Fills toeing out on natural slopes. Fills toeing out on natural slopes, which are steeper than three (3) horizontal to one vertical, shall not be permitted.

8. Combined cut and fill slopes. Combined cut and fill slopes shall meet the requirements of subsections (a), (b), (c), and (d) of this section insofar as steepness, height, and benching are concerned except that, where the slope exceeds twenty-five (25') feet in height, the required drainage bench shall be placed at the top of the cut slope. Fill placed on or above the top of an existing or proposed cut or natural slope steeper than three (3) horizontal to one vertical shall be set back from the top of the slope a minimum distance of six (6') feet.

9. Existing fills. All existing man-made fills on any and all sites shall be properly evaluated, and, if deficiencies exist, recommendations and design criteria for corrective measures shall be included within the soils engineering report.

10. Progress reports.

a. Periodic soils reports by a soils engineer certifying the compaction or acceptability of all fills may be required. Such reports shall include, but need not be limited to, the inspection of cleared areas and benches prepared to receive fill and the removal of all soil and unsuitable materials, the bearing capacity of the fill to support structures, the placement and compaction of fill materials, and the inspection of buttress fills, sub-drains, and similar devices. The frequency of such reports shall be at the discretion of the City Engineer and shall be a condition of the land disturbance permit. If the report is not submitted in a timely manner, the City Engineer may temporarily revoke or put on hold the Land Disturbance permit and all work should cease until such time as the report is submitted.

b. The City Engineer may require sufficient inspections by an engineering geologist to ensure that all geologic conditions have been adequately considered. Where geologic conditions warrant, the City Engineer may require periodic geologic reports. Such inspections and reports may be required to include, but need not be limited to, the inspection of cut slopes, canyons during clearing, operations for groundwater and earth material conditions, benches or keys prior to the placement of fill, and possible underground water spring locations.

11. Measure of settlement. On fills of forty (40') feet or more, if recommended by the soils engineer, the City Engineer or the Building Official may require the determination of the settlement characteristics of such fills to establish that any movements have substantially ceased.

12. In such cases, a system of bench marks shall be installed by a civil engineer or land surveyor at critical points on the fill, and accurate measurements of both horizontal and vertical movements shall be taken and evaluated by the soils engineer for a period of time sufficient to define the settlement behavior. The evaluation period shall in all cases include the period from October 15 through March 15.

The Engineer shall design the work covered under subsection 2.4 to meet the following technical specification sections:

1. Section 02291 – Embankment
2. Section 02292 – Dam Embankment Construction

E. **Buttress Fills**

1. General. A buttress fill is a designed compacted earth fill used for providing lateral support to an un-stabilized earth or rock mass. All buttress fills shall be designed in accordance with the recommendations and design criteria, including the sub-drain system, submitted by the soils engineer or engineering geologist with the approval of the City Engineer.

2. Foundation. The ability of the foundation soil to support the buttress shall be investigated, and additional benching shall be required to what is otherwise specified for ordinary fills. The soils engineer shall provide specifications for keying the base of the buttress and for bonding the buttress to the natural ground.

3. Sub-drains. Sub-drains which blanket the entire back face of the buttress or which occur at intervals shall be provided to prevent the buildup of hydrostatic pressure. The details of sub-drains shall be provided by the soils engineer.

4. Safety factor. The buttress fill shall be designed for a minimum safety factor of 1.50 based upon the smaller value of yield or ultimate shear strength of the fill material.

F. **Topsoil** – The Developer shall design the project to retain the topsoil on-site and not export it to an off-site location. Topsoil shall be stripped, processed and stockpiled or live hauled to an adjacent reclaim area in accordance with the requirements of the Contract Documents and Section 3.0 of these standards

G. **Slope Preparation** – Care must be taken to properly prepare the slopes for acceptance of seed erosion control blankets or other approved erosion control material. Clods, rock, tree, brush and other plant material and other obstructions shall be removed from the slope so that direct contact of the soil erosion blanket can be maintained for the entire blanket.

The Engineer shall design the work covered under subsection 2.4 to meet the following technical specification section:

1. Section 02293 – Slope Contouring

H. **Building Lots Requiring Additional Fill** – Lots requiring additional fill dirt in excess of 12-inches shall submit the following information for review, prior to construction. The International Building Code, Appendix 33 and City Ordinances are to be followed in the event a conflict exists than the more restrictive ordinance shall govern.

1. Geotechnical report addressing the following:

   a. Is existing soil able to receive the proposed additional fill?
   b. Is proposed fill material to be used correct for such usage?
   c. Procedure of placing additional fill

      (1) Maximum lift eight inches
      (2) Compaction to be 95% minimum, unless landscaped area and then the top 18" shall be at 90% compaction
      (3) Correct moisture

   d. Surface treatment to prevent erosion
   e. Maximum finish slope to be no greater than two (horizontal) to one (vertical)
   f. Slope setbacks to be as per International Building Code Appendix, Chapter 33, Excavation and Grading section 3314-Setbacks

      (1) Top of Slope: Height of slope divide by five (H/5); minimum of two feet and maximum of ten feet with additional setback for drainage surface waters.

(2) Toe of Slope: Height of slope divided by two (H/2) minimum of two feet and maximum of ten feet.

2. Final report from Geotechnical Engineer.

a. The conditions and procedure in the original geotechnical report was followed. Final report shall be written by author of original Geotechnical report.

2.9 EROSION CONTROL AND DRAINAGE DEVICES

A. **Intervening Terraces** - Paved (reinforced concrete or gunite) intervening terraces shall have a minimum width of six (6') feet and may be installed on the face of all cut and fill slopes at intervals not to exceed twenty-five (25') feet measured along a vertical plane.

The longitudinal slope of intervening terraces shall not be less than two (2%) percent or more than twelve (12%) percent, and any change in the rate of grade within these allowable slopes shall increase the grade in the direction of the flow.

A single run of an intervening terrace shall not exceed two hundred (200') feet to a down-drain. If soil in paved terrace areas is termed "expansive", the paved terraces shall be designed by a registered civil engineer to resist the expansive characteristics of the area.

B. **Diverter Terraces** - Where recommended by a soils engineer, paved (concrete or gunite) diverter terraces, a minimum of thirty (30") inches in width and one (1') foot in depth, shall be installed at the top of all cut slopes where the tributary drainage area above has a slope exceeding ten (10) horizontal to one vertical and a horizontal projection greater than fifty (50') feet. The diverter terrace design shall be shown on each plan for City approval, based on the recommendations of the soils engineer and engineering geologist to the satisfaction of the City Engineer.

C. **Vee Channels** - Where a slough wall is required at the toe of the slope, the City Engineer may require a vee channel to be constructed behind the wall to carry off the slope waters.

D. **Inlet Structures, Down-drains, and Outlet Structures**.

1. Inlet structures. Inlet structures shall be of concrete and galvanized metal. The inlet shall be grated or grilled or of such entry shape as to prevent the entry of objects of greater than four (4") inches dimension and permit objects of a maximum of two (2") inches dimension. Inlet structures shall be placed on the bench and shall be so shaped as to provide small entry losses. An overflow structure into the "vee" down-drains shall be provided.

2. Down-drains. Down-drains shall be of concrete, corrugated galvanized iron hot-dipped in asphalt, or equivalent. Pipe down-drains shall have a diameter of a size required by runoff calculations but not less than twelve (15") inches. Open channel down-drains shall be designed by a civil engineer and shall have a minimum capacity equal to four (4) times the capacity of the required pipe size. The alignment of down-drains shall be such as to maintain a constant velocity head.

3. Cleanouts. Cleanouts shall be provided at all points of severe change in grade and at points of entry to public rights-of-way.

4. Outlet structures. Outlet structures shall be of concrete, galvanized iron hot-dipped in asphalt, or equivalent. Where out-letting into streets, the structure shall be of City standards or a design approved by the City Engineer. Where out-letting into natural watercourses or other approved locations, the structure shall be provided with adequate velocity reducers, diversion walls, riprap, concrete aprons, or any similar energy dissipator. All slope drainage shall be collected and disposed of in the drainage device.

E. **Runoff Computations** - Runoff shall be based upon the proper fifty (50) year isohyetal map, and the runoff calculation shall be based upon the latest methods adopted by the City Engineer.

F. **Drainage Dispersal Walls** - A drainage dispersal device shall be constructed whenever it is necessary to convert channel flow to sheet flow, and the structure shall be of a design approved by the City Engineer.

G. **Sub-drains** – Sub-drains shall be installed to collect any active or potential springs or seeps, which will be covered by the fill. Sub-drains shall be installed after any watercourse has been excavated to firm material in preparation for receiving the fill. Individual design shall be shown on each plan for the City Engineer's approval. Upon the recommendation of the soils engineer and engineering geologist, and upon the approval of the City Engineer, the installation of sub-drains may be eliminated.

H. **Site Drainage** - All building pads with cut or fill shall be constructed to carry surface waters to the nearest practical street, storm drain, or natural watercourse approved by the City Engineer and/or appropriate governmental agency as a safe place to deposit such waters. At least a two (2%) percent grade toward the approval disposal area shall be required for building pads. Where recommended by the soils engineer, eave or ground gutters shall be provided to receive all roof water and deliver it through a non-erosive device to a street or watercourse. Compacted fill berms shall be required to be constructed at the top of all slopes where diverter terraces are not required by the City Engineer.

2.10 SLOPE EROSION PROTECTION

A. **General** – Storm water from construction sites can cause a great deal of damage to a construction project, as well as the existing City maintained storm drain system. To repair these damages, additional funds are required from Developers and other to repair these damages, which costs can be avoided. This section provides the Developer with a few "Best Management Practices" (BMP) accepted nation wide, by the international erosion control industry and the City of South Jordan. The purpose of this section is to indicate BMP's approved by the City and does not attempt to make an exclusive list of approved BMP's. Should the Developer wish to use BMP's not indicated here, the proposed BMP will be submitted to the City for approval, seven days before the preconstruction meeting is held with the City before implementing proposed BMP. It is unacceptable to use an unapproved BMP, and is the basis of a work stop order being placed on the project. The work stop will remain in force until said BMP is approved by the City or removed and replaced with an approved BMP.

B. **Sediment and Erosion Control BMP** – For the convenience of the Developer, engineer and builder, the City has prepared several tables, which indicate the BMP required for various situations and conditions. The situations include construction sites, slopes, soil types and then indicate the sediment control and erosion control BMP's approved by the City. Please refer to the following tables. If there is a conflict between the tables and the written description of the Sediment and Erosion Control BMP, the written description will control. The table is not an inclusive list of all approved BMP and actual site conditions may mandate the use of additional BMP not listed.

The difference between sediment control and erosion control is that sediment control contains the soil that has been eroded from the area of disturbance to the lowest point of the drainage, on or offsite. Due to re-grading, sediment removed for streets and maintenance of the sediment control BMP, sediment control is more expensive to pay for than properly designed and installed erosion control.

Erosion control is based on the principal that the soil stays in the location of final grading. Erosion control BMP's are designed so the soil remains stable and does not become displaced during rainfall or other source of water events.

SEDIMENT AND EROSION CONTROL BEST MANAGEMENT PRACTICES				
Area	***Soil Type***	***Slope***	***Type of Protection***	
			Sediment Control	**Erosion Control**
Construction Site	Clay	>4:1 (25%)	Silt fence, silt barriers, construction entrance, inlet protection, wattles, sediment basins	Construction phasing temporary and permanent seeding/mulch, mulch, riprap, surface roughing

		>3:1 (33.3%)	Silt fence, silt barriers, construction entrance, inlet protection, wattles, sediment basins	Construction phasing temporary and permanent seeding/mulch, riprap, or mulch/tackifier, anchored straw, soil retention blankets, surface roughing
		>2:1 (50%)	Silt fence, silt barriers, construction entrance, inlet protection	Construction phasing with temporary or permanent seeding/mulch (anchored), riprap, or anchored mulch, soil retention blankets, or anchored straw
Construction Site	Sand	>4:1 (25%)	Silt fence, silt barriers, construction entrance, inlet protection, sediment basins	Construction phasing with surface roughing or temporary or permanent seeding/mulch (tackifier), or mulch with tackifier, anchored straw
		>3:1 (33.3%)	Silt fence, silt barriers, construction entrance, inlet protection, sediment basins	Construction phasing with temporary or permanent seeding/anchored mulch, mulch, riprap or anchored mulch, soil retention blankets
		>2:1 (50%)	Silt fence, silt barriers, construction entrance, inlet protection, sediment basins	Construction phasing, temporary and permanent seeding/mulch, mulch, riprap mulch, soil retention blankets, reinforced turf mats

C. **Erosion Control BMP** – The Developer shall design and provide temporary erosion control measures as part of the project. Erosion control measures are to be used for disturbed areas, which will remain, untouched for more than 14 day but less than 21 days. These measures may include mulch and temporary seeding for interior slope stabilization and are discussed more thoroughly in Section 3.0 of these standards.

D. **Erosion Control** – The Developer shall design the project to provide erosion control measures. Erosion control measures are those, which will be constructed to provide for long-term (2-5 year) protection of soils on the project. Erosion control measures are those that prevent the displacement of soil particles. Examples of erosion controls include bonded fiber matrix mulches, tackifiers, erosion control or soil retention blankets. The

majority of these measures are discussed more thoroughly in Section 3.0 of these standards, except for the interceptor, roadway and toe ditches which are discussed below.

E. **Interceptor, Roadway and Toe Ditch** – The Engineer shall design the facility to include interceptor, roadway and/or toe ditches where it is deemed necessary to collect storm water and direct it to a discharge location. These ditches shall receive an increased amount of armoring in the way of soil erosion blankets, turf reinforced mats, energy dissipaters and riprap as determined by hydraulic design 'The Tractive Force Theory' as indicated in the Federal Highway Administration Hydraulic Engineering Circular No. 15 Design of Roadside Channels with Flexible linings is the method acceptable to the City. The design will be the determining factor of channel material used.

The Engineer shall design the work covered under subsection 2.5 to meet the following technical specification section:

1. Section 02273 – Interceptor, Roadway and Toe Ditch

F. **Brush-layering See Appendix A - 5200**

1. Purpose: This technique is used to stabilize slopes, particularly road fill slopes where construction has or will result in unstable soil conditions. A modified brush-layering technique often referred to as 'trench-packing' or 'branch-packing' can be installed with hard labor to repair existing rills and gullies or steep fill slopes. Both 'brush-layering' and 'branch packing' place live branches horizontally in successive layers up the face of the slope. The brush-layer branches, especially after rooting, reinforce slopes by serving as tensile inclusions, which provide frictional resistance to sliding or other types of displacement. The protruding brush retards runoff and reduces surface erosion.

2. Conditions Where Practice Applies: Brush-layering is best used concurrently with construction of fill slopes or embankments. Cuttings are placed by hand while heavy equipment is used to fill and compact each successive lift of soil fill. Brush-layering is similar in principle to other reinforced earth practices except that the reinforcing material is live branches. This practice is also a good remedial action intended to repair gullies or existing slopes, but may have limited applications in arid areas unless irrigated. Brush-layering performs several functions for erosion control, earth reinforcement and slope stability:

    a. Breaking up the slope length into a series of shorter slopes separated by rows of brush-layer.
    b. Reinforcing the soil with the unrooted branch stems.
    c. Reinforcing the soil as roots develop, adding significant resistance to sliding or shear displacement.
    d. Providing slope stability and allowing vegetative cover to become established.
    e. Trapping debris on the slope.
    f. Aiding infiltration on dry sites.
    g. Drying excessively wet sites.
    h. Adjusting the site's microclimate, thus aiding seed germination and natural regeneration.

i. Redirecting and mitigating adverse slope seepage by acting as horizontal drains.

3. Planning Consideration:

a. Plant material harvest and installation should be performed during its dormant season, late fall to early spring.

b. Use site reconnaissance to identify willow species, growth form, and soil and site conditions on adjacent sites and compare their conditions to the construction site. Planting will be more successful as the soil, site conditions and species selected match stable and vegetated nearby sites.

c. The ideal plant materials for wattling are those that: 1) root easily; 2) are long, straight and flexible; and 3) are in plentiful supply near the job site. Willow (Salix spp.) makes ideal wattling material. Some species of Baccharis, Cornus, and Populus also have very good rooting ability.

d. Choose plant material adapted to the site conditions and confirm the availability of plant material that will be used on site before construction begins.

e. When choosing live willow material for bioengineering applications, remember that young (less than 1 year old) wood or suckers will often sprout easier under optimum conditions but healthy, older wood (1 to 4 years old) has greater vegetative (energy) reserves necessary to consistently sprout and the older wood is much stronger. If possible, mix younger wood with older wood for the bioengineering application such that a majority of the material is 1 to 4 years old.

f. Research indicates that all cuttings should be soaked for a minimum of 24 hours, whether they are stored or harvested and immediately installed (Hoag 1991; Hoag et al. 1991; Hoag et al. 1992). Some research recommends soaking the cuttings for as much as 10 to 14 days

g. Willows have several different growth forms, from shrubs to large trees. Small to medium sized shrub-type and rhizomatous or creeping-type willows are used for planting channel banks. Upland willow species are found in relatively dry areas and should be used on similar sites. Tree-type willows are selected for the upper bank and flood plain area.

h. If branch cuttings are not pre-soaked then they shall be harvested no earlier than 48 hours prior to installation. Cuttings must be kept moist and cool at all times between cutting and installation therefore, all cuttings need to be thoroughly wet and covered with moistened wrapping before being transported.

i. Construction personnel shall be made aware that brush-layering uses live plant material and must be treated as such.

j. Spacing between the brush-layers is determined by the erosion potential of the slope (i.e., soil type, rainfall, and length and steepness of the slope). Spacing may be from 3-8 feet (1-2.5 m). On long slopes, brush-layer spacing should be closer at the bottom and spacing may increase near the top of the slope. Steep slopes (2:1) should not exceed, approximately, 30 feet in slope length. Reinforced earth design guidelines suggest that the slope height should not exceed 3 times the width of the reinforced volume. Therefore, for brush-layering with 6-8 foot long cuttings, the slope height should not exceed 8-24 feet.

G. **Cellular Confinement System for Slope Stabilization (See Appendix A – 5205)**

1. Purpose: Cellular Confinement System (CCS) is a permanent erosion control practice intended to stabilize steep slopes. The expandable panels create a cellular system that confines topsoil infill, protect and reinforce the plant's root zone, and permits natural subsurface drainage. The honeycomb shaped cells encapsulate and prevent erosion of the infill material. The cellular confinement systems are used for:

   a. Revetments - filling the cells with rock, gravel, or topsoil can provide an alternative to hard armor revetment systems.
   b. Erosion control on steep slopes - cells can be in-filled with soil and vegetated or in-filled with granular materials for sterile arid regions. Slopes as steep as 1:1 can be treated with cellular confinement systems.
   c. Flexible channel lining systems, either vegetated or rock filled.
   d. Framework for earth retaining structures.
   e. Road stabilization - cells confine and reinforce select fill materials, thereby increasing load-bearing capacities.
   f. Temporary low-water stream crossings.

H. **Erosion Blankets and Turf Reinforcement Mats Slope Installation (See Appendix A – 5210)**

1. Purpose: Erosion control blankets are used to temporarily stabilize and protect disturbed soil from raindrop impact and surface erosion, to increase infiltration, decrease compaction and soil crusting, and to conserve soil moisture. Mulching with erosion control blankets will increase the germination rates for grasses and forbs and promote vegetation establishment. Erosion control blankets also protect seeds from predators, reduce desiccation and evaporation by insulating the soil and seed environment.

   Some types of erosion control blankets and turf reinforcement mats are specifically designed to stabilize channelized flow areas. These blankets and mats can aide the establishment of vegetation in waterways and increase the maximum permissible velocity of the given channel by reinforcing the soil and vegetation to resist the forces of erosion during runoff events. Stems, roots and rhizomes of the vegetation become intertwined with the mat, reinforcing the vegetation and anchoring the mat.

2. Conditions Where Practice Applies: Establishing vegetation in channels or on slopes may require additional measures beyond seeding and straw mulching. Conditions where erosion control blankets and mats are appropriate may include:

   a. Slopes and disturbed soils where mulch must be anchored and other methods such as, crimping or tackifying are neither feasible nor adequate.
   b. Steep slopes, generally steeper than 3:1.
   c. Slopes where erosion hazard is high.
   d. Critical slopes adjacent to sensitive areas such as streams and wetlands.
   e. Disturbed soil areas where planting is likely to be slow in providing adequate protective cover.

f. Channels with flow exceeding 2-4 ft./sec.

g. In channels intended to be vegetated and where the design flow exceeds the permissible velocity. Allowable velocity, with turf reinforcement mats after vegetative establishment, is up to 10 ft/sec.

3. Specifications: Erosion control blankets are generally a machine produced mat of organic, biodegradable mulch such as straw, curled wood fiber (excelsior), coconut fiber or a combination thereof, evenly distributed on or between photodegradable polypropylene or biodegradable natural fiber netting. Synthetic erosion control blankets are a machineproduced mat of ultraviolet stabilized synthetic fibers and filaments. The nettings and mulch material are stitched to ensure integrity and the blankets are provided in rolls for ease of handling and installation.

   Soil stabilization and turf reinforcement mats are high strength, flexible, machine produced, three-dimensional matrix of nylon, polyethylene, polypropylene or polyvinyl chloride that have ultra violet (UV) stabilizers added to the compounds to ensure endurance and provide 'permanent vegetation stabilization'.

4. Planning Considerations: Erosion control blankets and turf reinforcement matting can be applied to problem areas to supplement nature's erosion control system (vegetation) in its initial establishment and in providing a safe and 'natural' conveyance for high velocity storm water runoff. These products are being used today in many applications where previously a structural lining or armoring would have been required. Care must be taken to choose the type of blanket or matting which is more appropriate for the specific needs of a project. There are many soil stabilization products available today and it is very difficult to cover all the advantages, disadvantages and specifications of all the manufactured blankets and mats. therefore, as with many erosion control type products, there is no substitute for a thorough understanding of manufacture's instructions and recommendations and a site visit by a designer or plan reviewer to verify a product's appropriateness.

I. Live Staking (See Appendix A – 5220)

1. Purpose: Using a system of live stakes creates a root mat that stabilizes the soil by reinforcing and binding soil particles together and by extracting excess soil moisture. The practice is commonly used in conjunction with other practices to provide for a more stable site conditions (i.e., used to anchor blankets, coir mats, turf reinforcement mats, straw rolls, etc.).

2. Planning Consideration:

   a. Live stake harvest and installation should be performed during its dormant season, late fall to early spring.

   b. Use site reconnaissance to identify willow species, growth form, and soil and site conditions on adjacent sites and compare their conditions to the construction site. Planting will be more successful as soil, site and species selected match stable, vegetated nearby sites. Live staking may have limited applications and success in arid environments unless irrigated.

c. If native willows or cottonwood are not found in the vicinity, live staking may not be a good option.
d. Choose plant material adapted to the site conditions and confirm the availability of plant material that will be used on site before construction begins.
e. Planting willows, in some cases, can adversely interact with other natural forces; such as water hydraulics.

Willows have several different growth forms, from shrubs to large trees. Small to medium sized shrub-type and rhizomatous or creeping-type willows are used for planting channel banks. Upland willow species are found in relatively dry areas and should be used on similar sites. Tree-type willows are selected for the upper bank and flood plain area.

J. **Water-bars and Rolling Dips (See Appendix A – 5230)**

1. Purpose: To limit the accumulation of erosive volumes of water on roads by diverting surface runoff at pre-designed intervals.

2. Planning Considerations: Construction of access roads, power lines, pipelines, and other similar installations often requires clearing long narrow right-of-ways over sloping terrain. Roads concentrate runoff. Gully formation may be especially severe in tire tracks and ruts. To prevent gully erosion, runoff can often be diverted across the width of the right-of-way to undisturbed areas by using waterbars or rolling dips.

3. A waterbar is a berm and excavation built diagonally across the road. Water-bars generally become less effective if driven over during wet weather, and are difficult to cross with low clearance vehicles. Rolling dips are gently sloping excavations running diagonally across the road surface, and are more appropriate for winter use. Rolling dips are more difficult to construct, but are much easier to traverse and require less maintenance.

4. Frequent rolling dips are often preferable, both economically and hydrologically, to improperly spaced cross road drains such as culverts.

5. Give special consideration to each individual outlet area, as well as to the cumulative effect of added diversions. Never outlet water-bars or rolling dips onto unprotected fill slopes. Use gravel to stabilize the diversion where significant vehicular traffic is anticipated.

6. Design Criteria: (See Appendix A – 5230)

a. Water-bars Height: 18-inch minimum measured from the channel bottom to the ridge top.
b. Side Slope: 2:1 or flatter; 3:1 or flatter where vehicles cross.
c. Base width of ridge: 6-foot minimum.
d. Spacing of water-bars/rolling dips is shown in the Table below.

Table 1.

Slope (%)	Spacing (ft)	Spacing High Erodable (ft)
<5	125	100
5 to 10	100	75
10 to 20	75	50
20 to 25	50	25
>35	25	25

e. An additional check for appropriate spacing is the distance it takes for the un-rocked, unprotected running surface of a nearby road to develop a 1-inch rill is a rough measure of the appropriate spacing distance.

f. Grade and angle: Positive grade not to exceed 2%. A crossing angle of approximately 60 degrees is preferred.

g. Outlet: Diversions should have stable outlets, either natural or constructed. Site spacing may need to be adjusted for field conditions to use the most suitable areas for water disposal - into brush, onto a ridgeline, or onto an energy dissipator.

K. **Slope Drain (See Appendix A – 5235)**

1. Purpose: To convey concentrated runoff down the face of a cut or fill slope without causing erosion.

2. Conditions Where Practice Applies: This practice applies to construction areas where storm water runoff above a cut or fill slope will cause erosion if allowed to flow over the slope. Temporary slope drains are generally used in conjunction with diversions to convey runoff down a slope until permanent water disposal measures can be installed.

3. Planning Considerations: Constructed slopes are often exposed to erosion between the time they are graded and permanently stabilized. During this period, the slope is very vulnerable to erosion, and temporary slope drains together with temporary diversions can provide valuable protection.

   It is very important that these temporary structures be sized, installed, and maintained properly, because their failure will usually result in severe erosion of the slope. The entrance section to the drain should be well entrenched and stable so that surface water can enter freely. The drain should extend downslope beyond the toe of the slope to a stable area or appropriately stabilized outlet. Appropriate TRM or rock lining should be installed to ensure stable drains.

Other points of concern are failure from overtopping from inadequate pipe inlet capacity and lack of maintenance of diversion channel capacity and ridge height.

4. Design Criteria:

a. Capacity: Peak runoff from the 10-year storm. See reference material for determining the peak runoff.

b. Pipe size: Unless they are individually designed, size drains according to the Table below:

Maximum Drainage Area per pipe	Pipe Diameter inches
0.50 ac.	12
0.75 ac.	15
1.00 ac.	18
>1.00 ac.*	As designed

*Inlet design becomes more complex beyond this size

c. Conduit: Construct the slope drain from heavy-duty, flexible materials such as non-perforated, corrugated plastic pipe, or open top over-side drains with tapered inlets. Install reinforced, hold-down grommets or stakes to anchor the conduit at intervals not to exceed 10 feet (3 m) with the outlet end securely fastened in place. Corrugated plastic pipe must have one (1) anchor assembly for every 20 feet of slope drain. The conduit must extend beyond the toe of the slope.

d. Entrance: Construct the entrance to the slope drain of a standard flared-inlet section of pipe with a minimum 6-inch. Make all fittings watertight. A standard T-section fitting may also be used at the inlet. An open top flared inlet for over-side drain may also be used.

e. Temporary Diversion: Generally, use an earthen diversion with a dike ridge or berm to direct surface runoff into the temporary slope drain. Make the height of the ridge over the drain conduit a minimum of 1.5 feet and at least 6 inches higher than the adjoining ridge on either side. The lowest point of the diversion ridge should be a minimum of 1-foot above the top of the drain so that design flow can freely enter the pipe.

f. Outlet Protection: Protect the outlet of the slope drain from erosion with an energy dissipator.

L. Biolog/Straw Rolls (See Appendix A – 5250 Biolog Rolls)

1. Definition: Straw rolls are manufactured from straw that is wrapped in tubular black plastic netting. They are approximately 9-inches in diameter by 25-30-feet long. Rolls are placed and staked along the contour of newly constructed or disturbed slopes.

2. Purpose: Straw rolls are intended to capture and keep sediment on the slopes. Straw rolls are useful to temporarily stabilize slopes by reducing soil creep and sheet and rill erosion until permanent vegetation can get established. Installed, straw rolls shorten the slope length, thereby interrupting the raveling and rilling processes, and reduce the slope steepness. They catch soil material that moves down the slope by the freeze/thaw processes. Organic matter and native seeds are trapped behind the rolls, which provide a stable medium for germination. Rolls trap fertile topsoil and retain moisture from rainfall, which aids in growth of tree seedlings planted along the upslope side of the rolls.

3. Design Considerations: Sites appropriate for straw rolls are:

   a. Slopes susceptible to sheet and rill erosion;
   b. Slopes producing dry ravel;
   c. Slopes susceptible to freeze/thaw activity; or slopes difficult to vegetate because of soil movement. Straw rolls are not intended for use in concentrated flow situations.
   d. Spacing of biolog/straw rolls – spacing is to be calculated using the soil loss tolerance factor of "1".

   It is imperative, especially on steeper slopes, that a sufficient trench is constructed to place the roll in. Without it, the roll will not function properly, runoff will scour underneath it, and trees or shrubs planted behind the roll will not have a stable environment in which to become established.

Straw rolls will last an average of one to two years. This is an important factor when planning the optimum length of time the slope will need mechanical stabilization. Straw rolls can be staked with willow stakes if site conditions warrant and the moisture retained by the straw roll will encourage willow establishment.

a. Advantages:

   (1) Straw rolls are a relatively low-cost solution to sheet and rill erosion problems.
   (2) They can replace silt fences or straw bales on steep slopes.
   (3) Rolls are a short-term solution to help establish native vegetation.
   (4) Rolls store moisture for vegetation planted immediately upslope.
   (5) Plastic netting will eventually photo degrade, eliminating the need for retrieval of materials after the straw has broken down.
   (6) Straw becomes incorporated into the soil with time, adding organic material to the soil and retaining moisture for vegetation.
   (7) Depending on slope steepness, straw rolls are installed at 25-50-foot intervals on the slope.

b. Disadvantages:

   (1) Rolls only function for one or two seasons.
   (2) Pilot holes through the rolls must be pre-driven with a metal rod.
   (3) If not installed properly with a sufficient trench, rolls may fail during the first rain event.

Straw rolls may require maintenance to ensure that the stakes are holding and the rolls are still in contact with the soil. This is especially true on steep slopes in sandy soil.

M. **Surface Roughening (See Appendix A – 5255)**

1. Definition: Roughening is a technique for roughening a bare soil surface with furrows running across the slope, stair stepping (5215), or tracking with construction equipment.

2. Purpose: Surface Roughening is intended to aid the establishment of vegetative cover from seed, to reduce runoff velocity and increase infiltration, and to reduce erosion and provide for sediment trapping.

3. Conditions Where Practice Applies: All construction slopes require surface roughening to facilitate long-term stabilization with vegetation, particularly slopes steeper than 3:1.

4. Planning Considerations: Rough slope surfaces are preferred because they aid the establishment of vegetation, improve water infiltration, and decrease runoff velocity. Graded areas with smooth, hard surfaces may be initially attractive, but such surfaces increase the potential for erosion. A rough, loose soil surface gives a mulching effect that provides more favorable moisture conditions than hard, smooth surfaces; this aids seed germination.

There are different methods for achieving a roughened soil surface on a slope, and the selection of an appropriate method depends upon the type of slope. Roughening methods include grooved or serrated slope grading, furrowing, and tracking. Factors to be considered in choosing a method are slope steepness, mowing requirements, and whether the slope is formed by cutting or filling

N. Wattles (See Appendix A – 5260)

1. Purpose: Wattling functions to reduce erosion and stabilize slopes in several ways:

   a. The wattle bundles, binding rope and stakes are all structural components, which combine to stabilize the surface layers of the slopes by resisting hydraulic and gravitational forces.
   b. Wattling prevents rills and gullies by reducing the effective slope length and thereby dissipating the energy of water moving downslope. Wattles immediately reduce surface erosion.
   c. The terraces formed by a series of wattles trap sediment and detritus. Infiltration is increased as runoff is slowed and on dry sites this increases the available water for plant establishment.
   d. Vegetation establishment is enhanced because wattling provides a suitable microsite for plants by reducing surface erosion, increasing infiltration rates and by forming a series of terraces with shallower slope angles.

2. Conditions Where Practice Applies: Wattling may be used for road fills, road cuts, gullies or slumped areas, eroded slopes or eroding stream banks.

a. Repair of small earth slips and slumps or to protect slopes from shallow slides 1-2 feet deep.
b. Wattling may be used to stabilize entire cut or fill slopes or localized gully areas of slopes.
c. Wattling may be installed during construction (dormant season) or as a remedial action on existing slopes.
d. Wattling is useful on slopes requiring other planting materials such as, woody vegetation, transplants, grasses, and forbs. Wattling also enhances conditions for natural invasion and the establishment of other plants from the surrounding plant community.

3. Planning Consideration:

a. Plant material harvest and installation should be performed during its dormant season, late fall to early spring.
b. Use site reconnaissance to identify willow species, growth form, and soil and site conditions on adjacent sites and compare their conditions to the construction site. Planting will be more successful as the soil, site conditions, and species selected match stable and vegetated nearby sites.
c. The ideal plant materials for wattling are those that: 1) root easily; 2) are long, straight and flexible; and 3) are in plentiful supply near the job site. Willow (Salix spp.) makes ideal wattling material. Some species of Baccharis, Cornus, and Populus also have very good rooting ability.
d. Choose plant material adapted to the site conditions and confirm the availability of plant material that will be used on site before construction begins. Wattling may have limited applications and success in arid environments unless irrigated.
e. When choosing live willow material for bioengineering applications, remember that young (less than 1 year old) wood or suckers will often sprout easier under optimum conditions but healthy, older wood (1 to 4 years old) has greater vegetative (energy) reserves necessary to consistently sprout and the older wood is much stronger. If possible, mix younger wood with older wood for the bioengineering application such that a majority of the material is 1 to 4 years old.
f. Research indicates that all cuttings should be soaked for a minimum of 24 hours, whether they are stored or harvested and immediately installed (Hoag 1991; Hoag et al. 1991; Hoag et al. 1992). Some research recommends soaking the cuttings for as much as 10 to 14 days.
g. Planting willows, in some cases, can adversely interact with other natural forces; such as water hydraulics to cause increased drainage to willows can partially block or deflect currents adversely. Willows have several different growth forms, from shrubs to large trees. Small to medium sized shrub-type and rhizomatous or creeping-type willows are used for planting channel banks. Upland willow species are found in relatively dry areas and should be used on similar sites. Tree-type willows are selected for the upper bank and flood plain area.

O. **Retaining Walls** – The Developer shall design and include retaining walls where necessary. These measures are discussed more thoroughly in Section 3.7 of these standards.

P. **Temporary Landscape Irrigation System** – In cases where soil erosion control measures are selected by the Developer to meet his project needs, a landscape irrigation system will need to be designed and constructed. The design of such systems shall be done by a licensed Landscape Architect, registered in the State of Utah and shall be reviewed and approved by the City prior to construction. These measures are discussed more thoroughly in Section 3.8 of these standards.

2.11 CHANNEL EROSION PROTECTION

A. **General** – Protection of channels used in storm water transmission is an important feature in the transmission of storm water flows from their place or origin to either a sedimentation basin, storm water detention basin, or other storm water facility. Since the storm water flows are concentrated in these channels, special care must be taken to ensure that sufficient protection is provided within the channel cross-section to eliminate excessive erosion. The following information is to be considered when designing facilities associated with storm water channels.

B. **Energy Dissipators (See Appendix A – 5000)** – The need for energy dissipaters for reduce water velocities/scour shall be identified through the preparation of a scour and sediment transport study to be prepared for projects which discharge their storm waters into an existing and/or natural runoff channel or stream.

The Developer's engineer is to submit design calculations for each energy dissipater in the scour and sediment transport study.

Energy dissipaters designed with the design procedure as shown in HEC 14 Material and include the following:

1. The sedimentation basin stabilized with vegetation and mulch protections as required by these standards.

2. All material used within the energy dissipater shall be capable of allowing vegetative growth in, around or through the structure.

3. Temporary irrigation system if vegetation is planted outside the native planting window.

C. **Grass-Lined Channel (See Appendix A – 5010 and 5015)**

1. Purpose: Lined protection of drainage ways reduces erosion by lowering water velocity over the soil surface and by binding soil particles with roots. The drainage way is any ground surface over which concentrated runoff travels. It is typically a manmade waterway, swale or ditch. It may also be the upslope flow of water and directs the concentrated flow along the surface of the barrier. Lined channels should be used where:

   a. A vegetative lining can provide sufficient stability for the channel grade by increasing maximum permissible velocity;
   b. Slopes are generally less than five (5%) percent;

c. Site conditions required to establish vegetation i.e., climate, soils and topography are present.

2. Design Considerations:

a. Grass-lined channels resemble natural systems and are usually preferred where design velocities are suitable. Select appropriate vegetation and construct channels early in the construction schedule before grading and paving increase runoff rates.

b. Generally, grass-lined channels are constructed in stable, low areas to conform to the natural drainage system, but they may also be needed along roadways or property boundary. To reduce erosion potential, design the channel to avoid sharp bends and steep grades. Meandering channels are preferred as they replicate natural systems and assist in slowing velocities.

The channel cross section should be wide and shallow with relatively flat side slopes so surface water can enter over the vegetated banks without erosion. Riprap may be needed to protect the channel banks at intersections where flow velocities approach allowable limits and turbulence may occur. Cross-section designs include:

a. Vee-shaped channels are generally used where the quantity of water is relatively small, such as roadside ditches. The V-shaped cross section is desirable because of difficulty stabilizing the bottom, where velocities may be high. A grass or sod lining will suffice where velocities are low or rock or riprap lining may be necessary in higher velocities.

b. Parabolic grass channels are preferred and often used where larger flows are expected and sufficient space is available. The shape is pleasing and may best fit site conditions. Riprap should be used where higher velocities are expected and where some dissipation of energy (velocity) is desired. Combinations of grass with riprap centers or turf reinforcement mat centers are useful where there is a continuous low flow in the channel.

c. Trapezoidal grass channels are used where runoff volumes are large and slope is low so that velocities are non-erosive to vegetated linings. Trapezoidal channels generally have concrete or riprap lined center for low flow.

(1) Grass-lined channels must not be subject to sedimentation from disturbed areas.

(2) An established grass-lined channel resembles natural drainage systems and is usually preferred if design velocities are below 5 ft/sec.

(3) Outlets should function with a minimum of erosion. See Appendix A – 5000 Energy Dissipator BMP.

(4) Channels with design velocities greater than 2 ft/sec. will require that turf reinforcement mats, erosion control blankets, fiberglass roving or straw and netting be installed at the time of seeding to provide stability until the vegetation is fully established. It may also be necessary to divert water from the channel until vegetation is established or to line the channel with sod.

(5) Whenever design velocities exceed 4 ft/sec. a permanent turf reinforcement mat or rock lining will be necessary.

(6) Sediment traps may be needed at channel inlets and outlets to prevent sedimentation.

3. Additional Design Criteria:

a. Capacity: Sufficient to convey 100 year – 24 hour storm.

b. Velocity: The allowable design velocity for grass-lined channels is based on soil conditions, type of vegetation, and method of establishment. If design velocity of a channel to be vegetated exceeds 2-4 ft./sec. a channel liner is required.

c. Depth: The design water surface elevation or a channel receiving water from diversions or other tributary channels shall be equal to or less than the design water surface elevation of the diversion or other tributary channel at the point of intersection. The top width of parabolic and vee-shaped, grass-lined channels shall not exceed 30 feet, and the bottom width of trapezoidal, grass-lined channels shall not exceed 15 feet unless multiple or divided waterways, riprap center, or other means are provided to control meandering of low flows.

d. Cross-section: The channel shape may be parabolic, trapezoidal, or V-shaped, depending on need and site conditions.

e. Side slopes: Grassed channel side slopes generally are constructed 3:1 or flatter to aid in the establishment of vegetation and for maintenance.

f. Grade: Generally restricted to slopes 5% or less. Either a uniform or gradually increasing grade is preferred to avoid sedimentation.

D. **Log Check Dam (See Appendix A – 5020)** – In order to reduce erosion in gullies and other drainage ways, log check dams may be required to be installed as indicated in drawing no. 5020. Logs are to be 4 to 6-inches in diameter which are to be placed vertically into the drainage way soils, adjacent to one another. The purpose of the dams is to slow the flow down the drainage, reduce the centerline slope, thereby reducing the velocity of the water and eventually create a more stable environment and reduce erosion.

E. **Riprap (See Appendix A – 5030)** – The Developer shall provide designed riprap where necessary to protect against soil erosion. Riprap is a layer(s) of stone or rock designed to protect and stabilize the surface of the soil from erosion from water or wind. Riprap may be use to stabilize cut and fill slopes, channel slopes and bottoms, inlets and outlets for culverts, bridges, slopes drains and shorelines to due wave action. These measures are discussed more thoroughly in Section 3.0 of these standards. The design of the riprap for channels or similar structures will be performed in accordance HEC 14, Design of Roadside Channels with flexible linings.

1. Purpose: To protect the soil surface from erosive forces and/or improve stability of soil slopes that are subject to seepage or have poor soil structure.

2. Conditions Where Practice Applies: Riprap is used for the following applications:

a. Cut-and-fill slopes subject to seepage or weathering, particularly where conditions prohibit establishment of vegetation,

b. Channel side slopes and bottoms,
c. Inlets and outlets for culverts, bridges, slope drains, grade stabilization structures, and storm drains,
d. Stream bank and stream grades,
e. Shorelines subject to wave action.

3. Planning Considerations: Riprap is a versatile, highly erosion-resistant material that can be used effectively in many locations and in a variety of ways to control erosion on construction sites.

Graded Versus Uniform Riprap: Riprap is classed as either graded or uniform. Graded riprap includes a wide mixture of stone sizes. Uniform riprap consists of stones nearly all the same size.

Graded riprap is preferred to uniform riprap in most applications because it forms a dense, flexible cover. Uniform riprap is more open and cannot adjust as effectively to movement of the stones. Graded riprap is also cheaper to install requiring less handwork for installation than uniform riprap, which must be placed in a uniform pattern. Uniform riprap may give a more pleasing appearance.

Riprap sizes are designated by either the mean diameter or the weight of the stones. The diameter specification is often misleading since the stones are usually angular. However, common practice is to specify stone size by the diameter of an equivalent size of spherical stone. Table 1 lists some typical stones by weight, spherical diameter, and the corresponding rectangular dimensions. These stone sizes are based upon an assumed specific weight of 165 lbs/ft^3 (2600 kg/m^3).

Table 1

Weight (lbs.)	Spherical Dia. (ft.)	Length (ft.)	Width/Height (ft.)
50	0.6	1.4	0.5
100	1.1	1.8	0.5
150	1.3	2.0	0.7
300	1.6	2.6	0.9
500	1.9	3.0	1.0
1000	2.2	3.7	1.3
2000	2.8	5.4	1.8
4000	3.6	6.0	2.0

A method commonly used for specifying the range of stone sizes in graded riprap is to designate a diameter for which some percentage, by weight, will be smaller. For example "d_{85}" specifies a mixture of stones in which 85% of the stone by weight would be smaller than the diameter specified. Most designs are based on "d_{50}", size stones.

When considering riprap for surface stabilization, it is important to anticipate visual impacts, including weed control, hazards from snakes and other animals, danger of slides and hazards to areas below steep riprap slopes, damage and possible slides from children moving stones, and general safety.

Proper slope selection and surface preparation are essential for successful long term functioning of riprap. Adequate compaction of fill areas and proper use of filter blankets or aggregate foundation is necessary.

Sequence of Construction: Schedule disturbance of areas that require riprap protection so the placement of riprap can follow immediately after grading. When riprap is used for outlet protection, place the riprap before, or in conjunction with the installation of the structure so that it is in place before the first runoff event.

4. Design Criteria:

a. Gradation: Riprap should be a well-graded mixture with fifty (50%) percent by weight larger than the specified design size. The diameter of the largest stone size in such a mixture should be 1.5 times the d_{50} size with smaller sizes grading down to 1-inch.

b. Size: The designer should determine the riprap size that will be stable for site conditions. Having determined the design stone size, the designer should then select the size or sizes that equal or exceed riprap gradation commercially available in the area. For more design criteria see references; Association of Bay Area Governments, Manual of Standards for Erosion and Sediment Control Measures; HEC 11 – Use of Riprap for Bank Protection.

c. Thickness: Construction techniques, dimensions of the area to be protected, size and gradation of the riprap, the frequency and duration of flow, difficulty and cost of maintenance, and consequence of failure should be considered when determining the thickness of riprap linings. The minimum thickness should be 1.5 times the maximum stone diameter, but in no case less than 6 inches.

d. Quality of stone: Stone for riprap may consist of fieldstone or quarry stone. The stone should be hard, angular, of such quality that it will not break down on exposure to water or weathering, and suitable in all other respects for the purpose intended. The specific gravity of the individual stones should be at least 2.5.

e. Size of Stone: The sizes of stone used for riprap protection are determined by purpose and specific site conditions.

f. Slope Stabilization: Riprap stone for slope stabilization not subject to flowing water or wave action should be sized for stability for the proposed grade. The gradient of the slope to be stabilized should be less than the natural angle of repose of the stone selected. Riprap used for surface stabilization of slopes does not add significant resistance to sliding or slope failure and should not be considered a retaining wall. The inherent stability of the soil must be satisfactory before riprap is used for surface stabilization. Slopes approaching 1.5:1 may require special stability analysis.

g. Outlet protection: Design criteria for sizing stone and determining the dimensions of riprap pads at channel or conduit outlets are presented in: USDA, SCS Field Design Manual; Manual of Standards for Erosion and Sediment Control Measures-Association of Bay Area Governments and other engineering design manuals.

h. Filter Blanket: A filter blanket is a layer of material placed between the riprap and the underlying soil to prevent soil movement into or through the riprap.

A suitable filter may consist of a well-graded gravel or sand-gravel layer or a synthetic filter fabric manufactured for this purpose. The design of a gravel filter blanket is based on the ratio of particle size in the overlying filter material to that of the base material in accordance with the criteria below. The designed gravel filter blanket may consist of several layers of increasingly large particles from sand to erosion control stone.

A gravel filter blanket should have the following relationship for a stable design:

$$\frac{d_{15}\,filter}{d_{85}\,base} < 5$$

$$5 < \frac{d_{15}\,filter}{d_{15}\,base} < 40$$

$$\frac{d_{50}\,filter}{d_{50}\,base} < 40$$

In these relationships, filter refers to the overlying material and base refers to the underlying material. These relationships must hold between the filter material and the base material (soil foundation) and between the riprap and the filter. More than one layer of filter material may be needed. Each layer of filter material should be at least 6 inches thick.

A synthetic filter fabric may be used with or in place of gravel filters. The following particle size relationships should exist:

(1) Filter fabric covering a base with granular particles containing fifty (50%) percent or less (by weight) of fine particles (less than U.S. Standard Sieve No. 200:

$$\frac{d_{85}\,base\ (mm)}{EOS * filterfabric} > 1$$

• total open area of filter should not exceed 36%

(2) Filter fabric covering other soils:

- EOS is no larger than U.S. standard sieve no. 70
- total open area of filter should not exceed 10%

*EOS - Equivalent Opening Size compared to a U.S. standard sieve size.

No filter fabric should have less than 4% open area or an EOS less than U.S. Standard Sieve No. 100. The permeability of the fabric must be greater than that of the soil. The fabric may be made of woven or non-woven monofilament yarns and should meet the following minimum requirements:

(1) Thickness 20-60 mils,
(2) Grab strength 90-120 lbs,
(3) Conform to ASTM D-1682 or ASTM D-177.

Filter blankets should always be provided where seepage is significant or where flow velocity and duration of flow or turbulence may cause the underlying soil particles to move through the riprap.

F. **Rock-Lined Channel (See Appendix A – 5040)**

1. Purpose: To convey concentrated surface runoff without erosion.

2. Conditions Where Practice Applies: This practice applies where design flow exceeds 2 ft./sec such that channel lining is required, but conditions are not suitable for vegetative protection. Specific conditions include:

   a. All roadside ditches or drainage channels greater than two (2%) percent and located in highly erodable soils that have a low maximum permissible velocity.
   b. The channel design velocity exceeds that allowable for a grass-lined channel.
   c. The channel will continue to down-cut without protection because it is adjusting to increased flow or a new base line (outlet elevation).

3. Design Criteria:

   a. Capacity: peak runoff from 100-year storm.
   b. Side slopes: 2:1 or flatter.
   c. Stone size: d= 2 inch minimum. Use engineering design procedures for sizing riprap for large or critical drainage channels. See reference material, Association of Bay Area Governments, North Carolina Erosion and Sediment Control Planning and Design Manual, or for the design of stable channels.
   d. Riprap thickness: T= 1.5 times the stone diameter or as shown on the plans; 6 inch thick minimum.
   e. Foundation: Extra-strength filter fabric or an aggregate filter layer, if required.
   f. Use a foundation for decomposed granite sands or other highly erodable soils.
   g. Channel cross section should conform as shown on plans for design high flow.
   h. Outlet must be stable.

G. **Straw Bale Sediment Barrier Check Dam (See Appendix A – 5055)**

1. Purpose: Straw bale sediment barriers are intended to intercept and detain small amounts of sediment. These barriers are suited for small channel flow situations; however, they may require significant maintenance to ensure their function. Areas where straw bale barriers could apply include:

a. The drainage area is 1 acre or less;
b. The maximum slope gradient for the swale above the barrier is 2:1;
c. The maximum slope length above the barrier is 100 ft.;
d. The flow is less than 2 ft 3/sec. flow.

2. Design Considerations: The straw bales are either wire-bound or nylon string tied. Wire-bound bales may deteriorate rapidly if the wire is placed in contact with the soil. Straw bales have a useful life of less than 6 months; however the life is extended when used with filter fabric. If used, the filter fabric should cover the bales, be enveloped in the rock at the spillway in order to better filter out fine soil particles, and extend beyond the spillway to act as an energy dissipater.

Design considerations should include the following:

a. Drainage area;
b. Runoff velocities;
c. Secure installation;
d. Compatibility with existing topography;
e. Spillways or energy dissipators;
f. Use of extraneous materials such as rocks, and/or filter fabric;
g. Accessibility for maintenance, repairs, and cleaning.

H. Straw Bale Dike (See Appendix A – 5060)

1. Purpose: A straw bale dike intercepts and detains small amounts of sediment transported by sheet type runoff. The dikes detain sediment by ponding water and allowing sediment to settle out. Straw bale dikes also slow runoff velocities, thus reducing sheet and rill erosion. Straw bale dikes are also useful for erosion and sediment control around the perimeter of a construction site. Straw bale dikes may be used where the following conditions apply:

a. The placement area is not a slope nor likely to receive concentrated runoff;
b. The maximum slope gradient above the barrier is 2:1;
c. The maximum slope length above the barrier is 100 feet;
d. The placement area is suitable for ponding of sheet runoff and sedimentation can occur.

2. Design Considerations:

a. The bales are to be placed along the slope contour or at the toe of the slope.
b. The principal mode of action is to pond water and allow particles to settle. Straw bale dikes are not designed to withstand high heads of water, therefore they should be located where shallow pools can form.
c. Straw bale dikes are suitable for sheet flow only. Straw bales have a useful life of less than 6 months; however, the life is extended when used with filter fabric. When installed straw bale dikes must be trenched in and appropriately butted and anchored. Loose straw debris must be cleaned up on a regular basis.

I. Temporary Diversion Dike (See Appendix A – 5065)

1. Purposes:

   a. To divert storm runoff from upslope drainage areas away from unprotected disturbed areas and slopes to a stabilized outlet.
   b. To divert sediment-laden runoff from a disturbed area to a sediment-trapping facility such as a sediment trap or sediment basin.
   c. The upslope dike can improve working conditions at the construction site and prevent erosion. The down-slope dike assures that sediment-laden runoff will not leave the site without treatment.

2. Planning Considerations:

   a. It is very important that a temporary diversion dike be stabilized immediately following installation with temporary or permanent vegetation to prevent erosion of the dike itself. The gradient must have a positive grade to assure drainage, but if the gradient is too great, precautions must be taken to prevent erosion due to high velocity channel flow behind the dike.
   b. This practice can use material available on the site and can usually be constructed with equipment needed for site grading. Stabilizing the dike with vegetation can extend the useful life of the practice. Diversion dikes are sometimes preferable to silt fence because they are more durable, less expensive, and require much less maintenance when constructed properly. When used with sediment trap or sediment basin they become a logical choice for a control measure once the control limits of the silt fence or straw bale barrier have been exceeded.
   c. Temporary diversion dikes are often used as a perimeter control in association with a sediment trap or a sediment basin, or a series of sediment-trapping facilities, on moderate to large construction sites. If installed properly and in the first phase of grading, maintenance costs are very low.

3. Design Considerations:

   a. Drainage Area: 5 acres or less
   b. Velocity: maximum permissible velocity
   c. Recommended Dike Design:

side slope:	2:1 or flatter
width:	2 foot (top width)
height:	1.5 feet
Freeboard:	0.5 feet

   d. Channel Design:

shape:	parabolic or trapezoidal recommended

side slope: 2:1 or flatter

Stabilization: vegetation or riprap

e. Grade: The channel behind the dike shall have a positive grade to a stabilized outlet. If the channel slope is less than or equal to two (2%) percent, no stabilization is required. If the slope is greater than two (2%) percent, the channel shall be stabilized.

f. Outlet: Divert sediment-laden water into a temporary sediment trap or sediment basin. Runoff form undisturbed areas should empty into an outlet protection unless well stabilized natural outlets exist.

2.12 STORM DRAINAGE SYSTEM

A. **General** – The storm drain and flood control system is more specifically discussed in the Storm Drainage and Flood Control Design and Construction Standards. The following information is very general in nature and the Developer in designing and constructing these facilities shall use the above-mentioned standards.

1. Master Plan Compliance – Developers shall be familiar with the City's current Master Drainage Plan and other storm drainage and flood control reports and master plans. Developer shall contact the City's Engineering Department for information regarding these reports prior to beginning design of these types of facilities.

2. Design Criteria - Developers shall use the design criteria specified in the City's current Storm Drainage and Flood Control Design and Construction Standards. These standards are available from the City's Engineering Department.

B. **Retention/Detention Basins** – The Developer shall design and include regional (master planned) and on-site retention/detention basins as part of the project. The design of regional and on-site retention/detention basins shall be performed in accordance with the City's current Storm Drainage and Flood Control Design and Construction Standards, Master Drainage Plan and other pertinent master plans and studies. The design will also fulfill the requirements of Phase II of the UPDES. These measures are discussed more thoroughly in Section 3.11 of these standards.

C. **Storm Drain System** – The Developer shall design and include master planned and local storm drainage pipeline and other appurtenances as part of the project. The design of storm drainage facilities, including pipelines, shall be performed in accordance with the City's current Storm Drainage and Flood Control Design and Construction Standards, Master Drainage Plan and other pertinent master plans and studies. These measures are discussed more thoroughly in Section 3.12 of these standards.

D. **Storm Drain Sediment Protection**

1. Drop Inlet Sediment Barriers (See Appendix A – 5300 and 5330)

a. Purpose: Drop Inlet sediment barriers are intended to prevent sediment from entering the storm drains during construction operations. This

practice allows early use of the storm drain system and is applicable for the phased construction schedule of a wet weather plan. Sediment-laden runoff is ponded before entering the storm drain, thus allowing some sediment to fall out of suspension.

b. Design Considerations: A straw bale drop inlet sediment barrier can be used where the inlet is intended to drain a relatively flat disturbed area (slopes less than 5%) in which runoff velocity is low¾ less than 0.5 ft^3/sec. Barriers of this type should not be placed around inlets receiving concentrated flows such as those along major streets or highways. This practice must not be used near the edge of fill material and must not divert water over cuts or fills.

The contributing drainage area should be one acre maximum. The ponding area shall be relatively flat (less than 1%) with sediment storage of 35 yds^3 per disturbed acre. As an optional design, the straw bales may be omitted and the entire structure made of gravel and stone, see Appendix A – 5300 and 5330. A structure made entirely of stone is commonly called a "gravel doughnut." The top elevation of the sediment structure must be at least 6 inches lower than the surrounding ground elevation down-slope from the inlet. It is important that all storm flows pass over the structure and into the storm drain, and not past the structure. Temporary diking below the structure may be necessary to prevent bypass flow. Material may be excavated from inside the sediment pool for this purpose.

2. <u>Continuous Berm (See Appendix A – 5305)</u>

a. Purpose: A continuous berm is used to divert and intercept sheet type runoff. Continuous berms are useful for erosion and sediment control around the perimeter of a construction site. The berms can be used to detain and pond sediment-laden storm water and allow the sediment to settle out. The continuous berms may be constructed as filter berms; with aggregate and permeable filter fabric to facilitate the accumulation of sediment and the drainage of storm water.

b. Conditions Where Practice Applies:

(1) Whenever storm water runoff must be temporarily diverted to protect disturbed areas or sediment must be retained on site during construction.
(2) Continuous berms can be used in conjunction with or instead of silt fence and straw bale dike for perimeter type sediment control.
(3) Continuous berms, for sediment control, may be used where:
(4) sheet and rill flows would occur;
(5) the area drains to the barrier 1 acre or less;
(6) the maximum slope gradient above the barrier is 2:1;
(7) and the slope length above the barrier is 100 feet maximum.

c. Design Considerations:

(1) Continuous berms require a Continuous Berm Machine (CBM). The CBM is a material feeding (hopper) and fabric-rolling system that creates the continuous berm by 'wrapping' geosynthetic material around sand, aggregate, or soil.

(2) Trenching is not necessary. Continuous berms should be applied to relatively smooth surfaces to form a tight seal between barrier and the ground.

(3) Staking is not necessary since the density of the berm is approximately 100 lbs/ft3. The fabric is flexible so the barrier can stretch and curve and allow the berm to conform tightly to ground surface irregularities.

(4) The CBM requires a source of filler materials, either sand, aggregate or local soils. When used in conjunction with a transit mixer discharging sand and/or aggregates it is possible to produce berm at a rate of approximately 50 ft/min. Using local soils can reduce that rate by 2/3.

Continuous berms can be used to pond water and allow sediment to settle out. Continuous berms can be constructed as filter berms, with aggregate and permeable geosynthetic materials intended to facilitate its drainage of the ponded water. Segments of the continuous berm may be filled with aggregate to produce "drainage chambers" and/or drainage pipes with or without risers may be used with the berms.

3. Curb Inlet and Drop Inlet Sediment Barriers (See Appendix A – 5315, 5320, 5325 and 5330)

a. Purpose: Curb inlet and drop inlet sediment barriers are intended to reduce the sediment discharged into storm drains by ponding the runoff and allowing the sediment to settle out. The structures allow for overflow from high runoff events and the gravel allows the ponds to dewater rapidly.

b. Design Considerations: The gavel filled sandbag curb inlet and block and gravel sediment barrier can be used at curb inlets on gently sloping, paved streets where:

(1) water can pond and allow sediment to separate out of suspension; and

(2) runoff is relatively low, less than 0.5 ft3/sec.

Once the small catchment areas behind the sandbags or block and gravel fill with sediment, future sediment-laden runoff will enter the storm drain without being de-silted. Therefore, sediment must be removed from these structures during or after each storm. Additional storage can be obtained by constructing a series of sandbag barriers along the gutter so that each barrier traps small amounts of sediment.

2.13 STREAMBANK EROSION PROTECTION

A. **General** – Protection of channels used in storm water transmission is an important feature in the transmission of storm water flows from their place or origin to either a sedimentation basin, storm water detention basin, or other storm water facility. Since the

storm water flows are concentrated in these channels, special care must be taken to ensure that sufficient protection is provided within the channel cross-section to eliminate erosion. Any work performed in streams under the jurisdiction of the Corp of Army Engineers (COE) are to meet their requirements. The following information is to be considered when designing facilities associated with storm water channels.

B. **Coir Roll and Coir Mats (See Appendix A – 5400)**

1. Purpose: Coir rolls and coir mats are commonly used for stream bank stabilization and shoreline protection. These bioengineering components provide immediate erosion control while also providing a stable medium to support the growth and development of plants. The coir (coconut fiber) material is natural, long lasting, and has high tensile strength. The fiber material can replace commonly used structural components such as rocks, riprap or logs. The coir rolls and mats can then be planted with appropriate vegetation. The fiber rolls and mats accumulate sediment while the plants grow and the plants roots develop. Eventually the coir material biodegrades and the cohesive strength of the root systems and flexible nature of the plants become the primary stabilizing element.

2. Conditions Where Practice Applies: Soil bioengineering techniques utilizing coir rolls and coir mats are generally appropriate for:

   a. Stream bank stabilization;
   b. Shoreline stabilization;
   c. Wetland mitigation or restoration; and
   d. Other riparian areas where immediate erosion control is needed while also creating hospitable conditions for plant establishments.

   Where perennial flows of water occur, coir rolls are generally placed offshore to break waves or applied at the toe of stream bank as a type of soft armor. Coir rolls provide a substrate for plant growth and facilitate sedimentation behind the roll by capturing sediment, mineral and organic materials.

2. Design Considerations: Bioengineering techniques utilizing coir rolls mats and vegetation should be considered as an alternative to stone revetments or other structural measures. Bioengineering techniques address aesthetic and ecological concerns by encouraging vegetation and wildlife habitat. Bioengineering techniques rely on plants and structures to function together in mutually reinforcing and complimentary rolls. With coir rolls and coir mats, the high tensile strength coconut fibers, fiber netting and the wooden stakes used to anchor the material all comprise the structural components of the system.

   Coir rolls, coir netting and coir mats also have high moisture retention properties and will generally last from 4-12 years. However, coir fiber's strength, longevity and ability to hold moisture depend on the type, density and grade of coir material chosen.

   Traditional processing of coconut fibers result in several different grades of coir. During processing, the initially separated fiber is called mattress

fiber coir, which is very short, thin and flimsy. The next grade of coir separated from the husk is called omat fiber coir. Once the mattress and omat fiber coir are separated, the remaining coir is called bristle fiber coir. Bristle fiber coir is longer, thicker, heavier and stronger compared to the other types.

Coir rolls are commonly available in 12-inch, 16-inch, and 20-inch diameters. The density of the coir logs and coir mats depends on the type of fibers used in construction and how tightly the fibers are compacted. Tensile strength, unit weight, open area, thickness and coir type are important properties to consider when woven coir blankets, and coir netting or coir rolls are specified. For instance, high density coir rolls, 9 lbs/ft3, might be more appropriate for high wave or high stream energy situations when low density rolls, 6 lbs/ft3, would be perfectly acceptable for wetland mitigation. Use light density coir if plant establishment is the only goal. Use high-density coir if protection from high wave or high stream energy, longevity and plant establishment is the project goals.

C. **Gabions (See Appendix A – 5400)**

1. Purpose: To protect stream banks from the erosive forces of moving water. Rock-filled gabions can be used to armor the bed and/or banks of channels or used to divert flow away from eroding channel sections.

2. Conditions Where Practice Applies: Rock-filled or vegetated rock gabions are applicable to stream bank sections which are subject to excessive erosion due to increased flows or disturbance during construction. This practice is applicable where flow velocities exceed 6 ft/sec. and where vegetative stream bank protection alone is not sufficient. Gabions can be used to construct deflectors or groins intended to divert flow away from eroding stream bank sections. Gabions are also used to construct retaining walls and grade control structures.

   a. Gabion Mattresses, also referred to as Reno mattresses or revet mattresses are not as thick as standard gabions, usually 0.5, .75, 1-foot. Gabion mattresses are used to line channels, armor stream banks and slopes, and used with gabions for grade control structures (spillways or aprons).

      Gabions and gabion mattresses are often preferable to rock riprap alone. For any given hydraulic condition, the gabion or gabion mattress revetment thickness is one third (1/3) of an equivalent riprap design.

      Gabions and gabion mattresses are flexible and free draining thus allowing some soil settling. They can be used in unstable streambeds and stream banks. Gabions can provide an important component to a 'bioengineering' solution for stream bank or slope erosion because they allow the growth and establishment of natural vegetation.

      Gabions containers are generally fabricated from a double-twist, hexagonal mesh of heavily zinc coated wire. Some gabions use welded wire. As an option the wire can be coated with PVC. Wire diameter is

0.086 inches for the double twisted gabion mattress and 0.106-0.120-inches for the double twisted gabion. The welded wire gabion use wire diameters of 0.120-inches or greater.

The rectangular gabion is divided into cells with diaphragms of equal capacity. The compartments add strength and assure that the full material remains evenly distributed. Gabions and gabion mattresses come in various sizes. Choose the dimensions of the gabions or combination of gabions to meet the design requirement site conditions.

Table 1. Typical gabions sizes

Letter Code	Length Ft	Width Ft	Depth Ft	# of Cells	Capacity in CY
A	6	3	3	1	2
B	9	3	3	2	3
C	12	3	3	3	4
D	6	3	1.5	1	1
E	9	3	1.5	2	1.5
F	12	3	1.5	3	2
G	6	3	1	1	0.666
H	9	3	1	2	1
I	12	3	1	3	1.33
T	9	6	.75	3	2
U	12	6	.75	4	1.33
Q	9	6	.5	3	1.33
S	9	6	.5	2	1

The mesh opening for gabions is typically or nominally 3.25 x 4.5 inches (TYPE 8 x 10). Some gabion mattresses have mesh openings of approximately 2.5 x 3.25 inches (TYPE 6 x 8). Both styles perform hydraulically equivalent.

3. Site Considerations: All of the general stream bank stabilization considerations are to be followed. The following are specific considerations for gabion structures. Gabion walls are appropriate where:

   a. The vertical integrity of a soil bank needs a higher tensile strength to reduce sloughing of the stream bank.
   b. There is moderate to excessive sub-surface water movements that may be creating erosion and damage other types of non-permeable structures.
   c. An excessively steep stream bank must be stabilized and vegetative or extreme mechanical means of stabilization (i.e., pulling back bank) are not feasible due to site conditions.
   d. Where slope must be modified while heavy machinery is unavailable to the site.
   e. Fill must be disposed of along an eroding stream bank (fill can be placed behind gabion to modify slope).
   f. A retaining or toe wall is needed to stabilize the slope.

g. Rock riprap is an appropriate practice but the available or desired rock size (smaller) is not sufficient alone to resist the expected shear stress exerted on the revetment.

4. Types of Gabion Structures:

a. Gabion Wall - a gabion wall is basically a gravity wall, which relies on their own weight and frictional resistance to resist sliding and overturning from lateral earth pressure.
b. Vegetated Rock Gabion - a rock-filled gabion earth-retaining structure, which has live branches, placed between each consecutive layer of rock-filled baskets. The live branches will take root inside the gabion and into the soil behind the structure. The vegetation will consolidate the structures and bind it to the slope.
c. Gabion Deflector - deflector or groins project into the streams and divert flows away from eroding stream bank sections.
d. Gabion Aprons - rock filled gabions or gabions mattress used as outlet protection, energy dissipators or spillways. These semi-flexible gabions are designed to settle without fracture and adhere to the ground if scour occurs.
e. Grade Control - drop structures or weirs. Gabion baskets and mattresses can be combined to construct check dams or weirs.
f. Channel Lining - gabion mattresses can be used to line channels. The lining thickness depends on many factors such as the type of rock, design flow velocity, sediment and bed-load, and channel gradient.

D. **Structural Stream Bank Stabilization (See Appendix A – 5410)**

1. Purpose: To protect stream banks from the erosive forces of moving water, where vegetative or bioengineered methods are insufficient or infeasible.

2. Conditions Where Practice Applies: Applicable to stream bank sections, which are subject to excessive erosion due to increased flows or disturbance during construction. Generally applicable where flow velocities exceed 6 ft/sec. or where vegetative stream bank protection is inappropriate.

3. Planning Consideration:

a. Stream channel erosion problems vary widely in type and scale and there is no one measure that works in all cases. Stabilization structures should be planned and designed by an engineer with experience in this field.
b. The purpose of this specification is merely to point out some of the practices, which are available, and to establish some broad guidelines for their selection and design.
c. Before selecting a structural stabilization technique, the designer should carefully evaluate the possibility of using vegetative stabilization alone or in conjunction with structural measures, to achieve the desired protection. Vegetative techniques are, generally, less costly and more compatible with natural stream characteristics.

4. Design Criteria: Since each channel segment requiring protection is unique, measures for structural stream bank protection should be installed according to a plan based on specific site conditions. Develop designs according to the following principles:

   a. Make protective measures compatible with other channel modifications planned or being carried out in other channel reaches.
   b. Use the minimum design velocity of the peak discharge of the 10-year storm. Structural measures must be effective for this design flow and must be capable of withstanding greater flows without serious damage. Riprap, gabions or other suitable materials should be used to stabilize the stream banks to the 10-year flood level or the top, whichever is lower.
   c. Ensure that the channel bottom is stable or stabilized by structural means before installing any permanent bank protection.
   d. Ensure that stream bank protection extends between stabilized or controlled points along the stream.
   e. Do not change channel alignment without a complete evaluation of the anticipated effect on the rest of the stream channel, especially downstream.
   f. Give special attention to maintaining and improving habitat for fish and wildlife.

   The upper portion of the bank should be covered with topsoil suitable for growing grasses, shrubs, and trees.

2.14 MISCELLANEOUS EROSION/SEDIMENT CONTROL BEST MANAGEMENT PRACTICES

A. **General** – By the use of sediment control on the project, the Developer/Builder needs to acknowledge the following

   1. Maintenance of the sediment controls will be performed on a weekly basis or as directed by the City.

   2. Re-grading will occur on a regular basis as necessary to eliminate concentrated flows.

   3. Sediment Control Inspections forms are to be filled out on a weekly basis and provided to the City. Sediment controls contained herein, cover the period of time of first land disturbance through and including final stabilization of the soil by vegetation, concrete, pavement or other City approved material. Failure to maintain sediment controls or to submit completed inspection forms will be the basis for a Work Stop being placed on the project and a Class C Misdemeanor issued. The sediment controls discussed herein are required on all projects without exception, other approved sediment controls are discussed in section 3.

   4. Mud tracking – Each construction site is required to have facilities and practices in place which eliminate the tracking of mud from the construction site onto City roadways. This shall mean that each construction site shall have in place, at least one construction entrance equipped with wash-down equipment to wash off vehicles and their tires so that mud is not tracked onto City streets.

B. **Construction Entrances (See Appendix A – 5105)** – A pad of crushed stone, aggregate, and gravel located where the construction traffic enters or leaves a construction site. The purpose of the construction entrance is to reduce the potential for vehicles tracking sediment, dirt or debris from the construction site onto City streets. In the event of a storm, water event the stone or gravel will act as a check dam retention structure to control flows. It is the intent of this requirement that the adjacent paved surfaces will remain free of materials tracked off of the site. The developer is required to maintain clean streets at all times.

At any point of ingress or egress at a construction site, where adjacent traveled way is paved, a stabilized construction entrance will be installed. The following shall be taken into account in design of such an entrance:

1. Native soils will not be allowed as part of construction of the construction entrance.

2. The construction entrance shall not extend more than 3-feet into the paved area.

3. 2 to 3-inch course aggregate shall be used.

4. The course aggregate shall be place to a sufficient depth to protect the street, sidewalk and curbing but shall not be less than 8-inches in depth.

5. The construction entrance is to extend a minimum of 50-feet behind the curb and gutter.

6. Geotextile fabric shall be used for entrances.

7. All ingress and egress to the construction site is limited to the use of this entrance unless otherwise approved. More than one entrance is allowed, however, the perimeter protection shall not deteriorate.

At a point of ingress or egress at a construction site, where the area is unapproved, the following conditions will apply:

1. Clear, grub and grade the area to provide a slope of 2-percent, minimum.

2. Compact the sub-grade as required.

3. Place a designed geotextile separation fabric as part of the construction entrance.

4. Place coarse aggregate, 2 to 3-inches in size to a depth of 8-inches minimum.

The Developer is responsible for maintaining the construction entrance as follows:

1. Inspect the entrance daily for loss of gravel and/or sediment buildup.

2. Inspect adjacent roads daily for gravel or sediment deposits.

3. Clean areas by sweeping or shoveling not by washing down the area with water.

4. Repair the entrance and replace gravel as required to maintain entrance in good working order.

5. Expand entrance area as required to accommodate traffic, prevent damage to concrete structures and avoid sediment being wash away in a storm water event.

The construction entrance shall be removed once the project has received final inspection approval and the front of the lot has been landscaped to the approval of the erosion control specialist.

The Engineer shall design the work covered under subsection 2.5 to meet the following technical specification section:

1. Section 02276 – Stabilized Construction Entrance

C. **Sedimentation Basins (See Appendix A – 5110)** – The need for sediment basins shall be identified through the preparation of a scour and sediment transport study to be prepared for projects which discharge their storm waters into a natural runoff channel or stream. The study shall be prepared by a registered civil engineer experienced in sediment transport and scour analysis and shall be approved by the City prior to the Developer retaining the consultant. An outline of the report shall be submitted to the City for approval prior to initiating the study. The draft of the report shall be submitted to the City for review and comment and the City's comments shall be incorporated into the report prior to finalizing the report. The final report shall indicate recommendations to eliminate/reduce scour and sediment transport in the existing natural discharge channel and shall also identify the size, location and proposed generalized design of any sedimentation basins needed for the project to include.

1. Energy dissipaters designed with the design procedure as shown in HEC 14.

2. The sedimentation basin stabilized with vegetation and the mulch protection as required by the City's Effective Planting Plan.

3. All materials used within the sedimentation basin shall be capable of allowing vegetative growth in around or through the structure. Concrete energy dissipaters are discouraged.

4. Temporary irrigation system if vegetation is planted outside the native planting window.

5. If the basin is also used as a detention basin or has a flow outlet demonstrate the flow path length is sufficient enough to have sediment drop.

6. Complies with the UPDES Phase II requirements.

The preliminary and final design of the sedimentation basin shall be reviewed and approved by the City prior to proceeding.

D. **Concrete Structures** – The design of concrete structures related to grading, erosion and sedimentation control and re-vegetation shall be performed by a registered civil engineer.

The developer's engineer shall submit a comparison of structures indicating concrete structures are the only stable structures to use. The design shall take into account the requirements of Section 3.9 of these standards

E. **Limits of Disturbance (LOD) Control** – The Developer shall design the project to provide for LOD control. LOD is considered to be a minimum protection when erosion control methods are not used. These measures are discussed more thoroughly in Section 3.5 of these standards.

2.15 VEGETATION AND REVEGATATION

A. **General** – The purpose of this effort is to establish native and other appropriate plant species on disturbed areas, which will assist in the stabilizing of these disturbed areas, and reduce the possibility of erosion. Other support efforts associated with vegetation and re-vegetation will include seedbed preparation, topsoil, appropriate mulch protection, energy dissipaters and other areas which will assist in allowing cut and fill slopes and other disturbed areas in being re-vegetated.

B. **Planting and Irrigation of Cut and Fill Slopes** - All cut and fill slopes greater than three (3') feet in height shall be planted and irrigated with a sprinkler system in accordance with the provisions of this chapter.

1. The land disturbance permit holder, or his authorized representatives, shall be responsible for installing all landscaping in accordance with an approved landscape planting plan, for a sprinkler system, and for maintaining all cut and fill slopes. The installation of the landscaping and of the required sprinkler system shall be complete within six (6) months after the date of the termination of the grading. Deviations from the requirements of this section may be permitted in exceptional circumstances or where unavoidable hardship would result from a strict application of these requirements when a waiver has first been obtained from the City Engineer. A separate bond or cash deposit shall be posted with the City Engineer to guarantee such landscaping, sprinkler system, and the maintenance thereof, and such bond or cash deposit, or portions thereof, shall not be released until the landscaping has been established for at least one hundred, twenty (120) days after planting and permanent responsibility for the landscape maintenance has been established.

2. Landscaping planting plan. A landscaping planting plan shall be prepared and submitted for approval by the City Engineer and the Community Development Director prior to obtaining a land disturbance permit. A soil test shall be made to determine the plant materials which are suitable for the slopes, and the plant materials utilized on the slopes shall be compatible with the soils report and in accordance with the approved planting schedule or as required by a condition of a site plan or final plat map. There shall be a variety of ground covers, trees, and shrubs incorporated into the landscaping plan and utilizing plants from the "Approved Planting Schedule" set forth in subsection (d) of this section. Other plant materials may be substituted for the "Approved Planting Schedule" if submitted and recommended by a registered landscape architect and approved by the City Engineer.

3. Irrigation plan. An irrigation plan for the sprinkler system to be installed on all cut and fill slopes shall be submitted to and approved by the City Engineer prior to the issuance of the land disturbance permit.

4. Approved planting schedule. All plants required by the provisions of this section shall select from Section 2.15.C. Vegetation and Revegetation Development Standards and 2.15.D. Effective Planting Plan of these standards.

C. **Vegetation and Re-vegetation Development Standards**

1. Native vegetation shall be removed only when absolutely necessary; e.g. for the construction of buildings, roads and fill areas, as approved by the City Planning Commission. When removal of vegetation is required see Tree Removal Application Standard and information contained herein:

LIMITS OF DISTURBANCE TABLE	
Area	Maximum Limits of Disturbance
Roads	The catch line of road, plus two feet
Buildings	The foot print of the building plus 10 ft. (total 5 ft. in each direction)
Fill Areas	The toe of slope plus 2 ft.
Cut Slopes	Top of Slope

a. The Developer or Contractor shall provide a barrier of protection at the limits of disturbance to prevent additional areas from being disturbed.

2. Re-vegetation of areas within the area of disturbance will be as required within 3 weeks of reaching final grade. Temporary irrigation will be required during the initial establishment of the vegetation unless waved by the Erosion Control Specialist. Temporary irrigation is defined as aboveground water dispersion system. The Developer shall remove the temporary irrigation system after approval of the Cit Engineer.

3. The Developer shall submit the proposed seed mix to the City and provide the following for each bag of seed used 30 day before starting the re-vegetation.

   a. Labeling and identifying the contents of the seed mixture by scientific and common name).
   b. Quantity of seed as a function of pure live seed (PLS).
      PLS = purity x germination.
   c. Date of the germination or tetrezolium tests
   d. The date of analysis shown on each bag shall be within nine months of the time of use.
   e. The City reserves the right to request a sample of the seed mixture for the purpose of analysis and testing. The Developer shall pay for said testing.

4. Seedlings and shrubs are to be indigenous to the area being revegetated. The seedlings and shrubs should:

a. Be from a reputable dealer
b. Identified with scientific and common name
c. Temporary irrigation, as defined above, shall be required during the initial establishment of the seedlings or vegetation.

5. All seeds, seedlings, shrubs and trees shall be protected with a mulch material that has been designed for site-specific conditions. The mulch material shall meet the following criteria:

   a. The City's Effective Planting Plan will be used in determining mulch protection required for the seed.
   b. Test results from an independent testing agency (i.e. TTI, UWRL) will be submitted to the City, indicating that the mulch material proposed is appropriate for the specific conditions of the site, including that the mulch material is compatible with the proposed seed mix.
   c. Submit to the Engineering Department, acceptable results from the Universal Soil Loss Calculations (USLE) or the Revised Universal Soil Loss Calculations (RUSLE), indicating that the soil loss does not exceed 15 times the baseline calculated soil loss. This analysis is to be performed by one of the following individuals; soil conservationist, agronomist, certified professional erosion and sediment control specialist.
   d. The mulch material application guidelines that indicate site specific conditions.

6. The re-vegetation work shall be performed by persons or firms, having expertise in re-vegetation of similar site-specific site conditions on the proposed re-vegetation site. The re-vegetation contractors, erosion control specialist and landscape architects are acceptable providing they can demonstrate their expertise in re-vegetation of similar site-specific conditions.

7. At the request of the Developer and/or at the end of the warranty period, which is three years, of the re-vegetation bond, the City will perform an inspection to determine if the vegetation has been established enough to prevent future erosion. The technical procedure in determining if the vegetation has been established enough to stabilize the soil against either rill or gully erosion is the quadrant frame method or the step transect method. Both methods suffice in comparing plant cover, species richness and acceptable soil loss and shall be covered on re-vegetated area and adjacent undisturbed and/or native site. Either method will be performed at several randomly selected locations. A reclaimed herbaceous natural plant community having 80% of the cover and species abundance of adjacent undisturbed perennial vegetation will be deemed successful.

8. Re-vegetation Bond and Re-vegetation Agreement: A re-vegetation bond shall be established in accordance with City policy and standards as approved by the City attorney. A fully executed re-vegetation agreement shall accompany the bond.

D. **Effective Planting Plan** – To satisfy the re-vegetation requirements of the City ordinances and the International Building Code, IBC, this effective planting plan has been compiled. The proper and recommended installation of the material state herein, is a requirement to satisfy the re-vegetation bond release periods.

1. Temporary Seeding – Subdivisions and other developments may benefit from temporary seeding. The intent of this seeding is to temporarily control dust, control weeds, and reduce the possibility of erosion on vacant lots until permanent-stabilizing measures can be implemented. Care should be taken to use a seed mixture that will not compete with establishing permanent seeding. Temporary seeding requires the same irrigation requirements and mulch protection requirements, as does permanent seeding. The use of temporary seeding does not satisfy the requirements of the Re-vegetation Bond and used in areas with slopes less than 5 H.: 1 H. Seed suppliers should be contacted for the most current seed available before specifying the seed mix, the seed mix should use these seeds within the seed mix:

   a. Sterile Annual Ryegrass
   b. Rye, winter or spring
   c. Barley, spring
   d. Oats, spring
   e. Wheat, winter or spring
   f. Slender Wheatgrass

2. Slopes – Erosion is reduced by the root zone matrix of grasses, therefore the use of grasses is one of the essential elements for the requirements to satisfy the re-vegetation bond release requirements.

   The use of wildflowers are atheistically pleasing and is encouraged by the City, however, the wildflower portion of the seed mix should be minor. The use of shrub or tree seedling may be required based on the native condition of the land prior to disturbance.

   The seed mixture applied to the slopes should be at approximately 40 lbs. per acre with upland dry seed mix. The following grasses should be included the seed mix specified:

Common Name	Scientific Name
Sodar Streambank Wheatgrass	Agropyron, riparium
Nezpar Indian Ricegrass	Oryzopsis hymenoides
Western Wheatgrass	Agropyron smithi
Blue Bunch Wheatgrass	Agropyron spicatum

3. Seed/Seedling – The vegetation community in the native areas of the City has several shrub species along with native grass and flowers. Prior to any land disturbance a field inventory of the native vegetation community, including cover estimates, is to be submitted to the City for review. This inventory will establish the replace species and percentage of cover on the project, this is to ensure the re-vegetation of area to pre-disturbance conditions, the cost of the seedlings is to be included in the re-vegetation bond.

4. Hillside Regions – Seed/Seedlings to be planted shall be primarily perennial natives. The vegetation inventory will determine actual specie types. The listed seedlings should be among the mixture of seedlings used.

Common Name	Scientific Name
Squawbush	Rhus trilobata
Wyoming Sagebrush	Artemisia tridentata wyomingensis
Gambel Oak	Quercus gambelli
Antelopebrush	Purshia tridentata
Rabbitbrush	Chrysothamnus nauseosus
Winterfat	Eorotia lanata
Mountain Sagebrush	Artemisia tridentate

5. Wetland and Riparian Areas – To ensure protection the native habitat, filtration of water and bank protection from erosion. A plant inventory will determine the existing specie and coverage of wetland vegetation and will be the basis to determining the re-vegetation specie. In areas containing the Russian Black Olive tree the developer will substitute the Russian Black Olive tree with an acceptable native woody plant. The City and Corp of Army Engineers will determine the acceptability of the replacement seedlings.

6. Channels, Swales, Toe Ditches, Inceptor Ditches and Concentrated Flows – The flow characteristics of channels, interceptor ditches or toe ditches used in urban storm drainage may require the use of a turf reinforced mat. A qualified professional shall design and specify the appropriate matting based on Federal Highway Administration requirements. The following grasses should be used in the seed mixes and applied at a minimum rate of 30 lbs./acre:

Common Name	Scientific Name
Ephraim Crested Wheatgrass	Agropyrona cristation
Sodar Streambank Wheatgrass	Agropyrona riparium
Western Wheatgrass	Agropyrona smithii
Covar Sheep Fescue	Festucia ovina
Perennial Ryegrass	Lolium perenne

7. Mulch Protection – The mulch is to provide a biomass that will promote germination, protect against erosion, and provide moisture during the dry seasons, for at least two years to three years depending on the elevation of the land disturbance.

Area Elevation	Years
Valley and Foothills	Two Years
Mountains above the 5,200 foot elevation	Three Years

8. Materials and Methods

Slope	Acceptable Products	Anchors (b)

(Horiz:Vert)		(per sq. yd)
40:1 to 10:1	Hydro mulch and seeding (a) Drill seeding with native soil cover (a) Land Imprinting (a) Straw crimping (a,b)	N/A
10:1 to 3:1	Mechanically Anchored Straw (a,b) Manufactured straw or excelsior blanket with netting one side (e) Land Imprinting (a,e)	c per manufacturer's recommendation
3:1 to 2:1	Manufactured straw/coconut mat, straw mats with netting on both sides, Wood excelsior blanket with netting on both sides (e)	d As per manufacturer's recommendations

Notes:

a. A temporary irrigation system will be required for the early days of germination.

b. To be used only in a wind protected area, as approved by the City.

c. Slope length not to exceed 50 feet unless manufacturer can demonstrate by the R.U.S.L.E. or other appropriate the material BMP will work. Empirical information will not be acceptable.

d. This is a minimum standard only. Anchors are to keep the matting in direct contact with the soil. Additional staples may be required at the direction of the City.

e. The soil to be at optimum moisture within the top six inches of soil. Optimum moisture to be determined by geotechnical report.

9. Irrigation – The developer/builder is responsible for providing reasonable amount of moisture to promote growing conditions of the revegetation project. The City recommends temporary irrigation to be used a minimum of 60 days year round. However, the City requires temporary irrigation to be used for a minimum of 60 days between May 1 and October 15.

E. **Erosion Control / Re-vegetation Plan** – The Developer is responsible for preparing a re-vegetation plan for the project which identifies seedbed preparation, erosion control BMP to be used, temporary seeding efforts, permanent seeding, mulching, inlet sediment barriers and other items related to re-vegetation and erosion control.

The re-vegetation plan shall include the following:

1. A field evaluation of the existing vegetation to include herbaceous plant cover, overall species abundance, and plant litter.

2. An evaluation of noxious or prohibited restricted weeds.

3. A list of target native perennial species to be included in the seed mixture.

4. Preliminary soils information based on published soil surveys.

5. Routine soil sample to evaluate fertility requirements for reclaimed areas.

6. A follow-up vegetation inventory during the second growing season on reclaimed land to evaluate the successful establishment of target perennial vegetation.

7. A final vegetation inventory prior to bond release evaluating vegetative cover and species abundance to ensure 80% establishment of adjacent undisturbed areas.

The Engineer shall design the work covered under subsection 2.5 to meet the following technical specification section:

1. Section 02902 – Re-vegetation Plan
   Also in Section 4 or these Standards

F. **Permanent Seeding** – The Developer is to provide for the design and installation of permanent seeding and related items for the project. This practice will establish perennial and permanent plantings for a site within 21 days of final grade being reached. These measures are discussed more thoroughly in Section 3.13 of these standards.

SECTION 3.0

MATERIALS

3.1 GENERAL REQUIREMENTS

This section discusses the materials involved in grading, erosion, sedimentation control and re-vegetation efforts and associated construction activities. Design and construction related to storm drainage facilities is subject to the design and construction standard for that specific type of facility. Separate design and construction standards are available from the City's Engineering Department for culinary water, sewer, secondary water road and bridge construction and storm drainage and flood control facilities. This standard is in addition to previously mentioned standards, in the event a conflict arises the more restrictive standard will govern. The materials selected have been chosen for their strength, durability and ease of maintenance. All materials, unless specifically approved otherwise, shall be new and unused.

Where applicable, American Pubic Works Association (APWA), American Society of Testing Materials (ASTM), American Association of State Highway Transportation Officials (AASHTO) or other standards have been referenced and it shall be the responsibility of the developer/engineer /contractor to be familiar with those standards to insure compliance. This standard will govern in the event of a conflict. Titles corresponding to the specific numbers are given in the reference section of the standards.

In some instances, particular manufacturers and product names have been mentioned as being approved. Other products may also meet the requirements, but must be first approved in writing by the Engineering Department. Two factors that are considered by the Engineering Department and the City Engineer in products as approved:

1. Products performance of the Texas Transportation Institute (TTI), Manufacturer's Literature or Utah Water Research Lab.

2. The calculation results of the USLE or RUSLE on a site specific design.

Manufacture's literature not based on results from an independent testing facility will not be considered. Manufactures will be required to submit the complete report from the independent testing facility to the Engineering Department for a complete review on alternate products.

If at any time the Engineering Department believes that the use of a specific product must either be halted or changed, the City Engineer has the authority to make the change providing the decision is based upon an engineering, performance or maintenance evaluation. A copy of all technical specifications is contained in Appendix B.

3.2 TESTING AND FINAL ACCEPTABILITY OF MATERIAL

The Engineering Department will require such tests and certifications as deemed necessary to show that the specified materials have been employed. Notwithstanding prior factory or yard inspections, the City Engineer will have the right to reject any damaged or defective materials found on the job and order its removal from the site. Further information on testing is contained in Section 9.0 – Testing, of this manual.

3.3 TOPSOIL

A. **General** – Topsoil shall be stripped, stockpiled, or live hauled in accordance with the requirements of these standards and the Contract Documents. The Contractor shall, where possible, keep the height and size of topsoil piles to a minimum. Topsoil is to be used only to stockpile and replace for re-vegetation, excess handling of the topsoil should be avoided. Stockpiles are not to exceed 25 feet in height and the amount of time the topsoil piles kept in a stockpile is also to be kept to a minimum. The intent of topsoil stockpiling is to retain the soil structure, preserve pore space essential for microorganisms and provide an environment that will retain the soil fertility to promote the restoration of native seeds indigenous to the area.

Stockpiles are to be setback at least 100-ft away from native undisturbed areas and live bodies of waters, including seasonal drainage channels. The developer may propose BMP to prevent the stockpile from eroding from wind or water. The intent of the topsoil setbacks is to preserve native vegetation, preserve drainage channels and satisfy the UPDES regulations

The Developer may also propose other methods and locations of stockpiling topsoil for review and approval by the City. Satisfying the intent of stockpiling topsoil and the setbacks indicated herein, for reviewing any proposed stockpile location.

The Engineer shall design the work covered under subsection 2.6 to meet the following technical specification section:

1. Section 02925 – Topsoil

3.4 EROSION CONTROL

A. **General** – Interim measures could be used in the areas that have been graded and left exposed and not brought to final grade within 21 days of initial disturbance. The measures discussed below include the use of mulch, organic tackifiers and temporary seeding for interior slope stabilization.

1. Interior Slope Stabilization, Mulch – The placement of material to stabilize the soil against the forces of wind and water as an interim measure could include tackifiers, sediment controls, temporary seeding, wood mulches, water, manufactured mulch blankets made from excelsior or straw.

   Interim soil stabilization, measures are to be applied to the soil from the day of initial disturbance until the soil has received approved erosion control and re-vegetation measures as per the Re-vegetation Bond.

   Site-specific conditions will determine the recommended seed mix. Check with the project's Development guidelines, City of South Jordan, local seed suppliers or County Extension Service for recommended mixes for site-specific conditions.

The Effective Planting Plan will determine the actual mulch material used to protect the seed. Provisions for temporary irrigation is required throughout the year.

The re-vegetation project approval will be based on the Re-vegetation Bond reductions procedures. It is the responsibility of the developer to select, install, irrigate and maintain the project in such a manner as to qualify for the bond reductions.

2. Slope Stabilization, Temporary Seeding – Temporary seeding means the growing of a short term perennial or annual cover (plants) on a disturbed construction site that is disturbed and the use of temporary seeding is to control erosion from wind or water. The use of temporary seeding is recommended for areas that have been disturbed and requires stabilizations and the City deems it not appropriate for a re-vegetation bonds. An example of this would be a residential subdivision that has been massed graded and the City agrees with the developer, residential home construction will invalidate the re-vegetation bond.

   Temporary seeding is subject to the same seed protection requirements as outlined in the effective planting plan. This practice is to use fast growing grasses whose root system hold down the soils so they are less apt to be carried offsite by water or wind. Another advantage of temporary seeding is it reduces the problems associated with mud and dust from bare soil during construction.

   Whereas temporary seeding requires temporary irrigation and the same mulch protection as permanent seeding, it could be more cost effective to evaluate chemical stabilizers.

The Engineer shall design the work covered under Section 2.0 and Appendix B to meet the following technical specification section:

1. Section 02271 – Erosion Control

3.5 LIMITS OF DISTURBANCE (LOD)

A. **General** – Limits of disturbance (LOD) barriers are to be placed, reviewed and approved in writing by the Engineering Department prior to any land disturbance. Approved minimum barrier are described below.

1. Fabric: Design for site specific conditions

2. Posts: 2 x 2, 6.0-ft long to be approved by the Engineering Department.

3. Wire Mesh: 14 gage min. with 6 inch minimum openings

4. Wire Stables: 1-inch long, hog rings or wire ties are acceptable when approved by the City Engineer.

5. Straw Bales: Not acceptable

6. Pre-manufactured barriers are acceptable when approved in writing by the Engineering Department.

7. Straw wattles

The LOD boundary control is to be installed by placing posts on 6-foot centers with a minimum 2- foot of bury and 3-feet exposed above grade. The Contractor is to excavate the anchor trench on the uphill side of the posts. The wire mesh shall be secured to posts on the up-hill side of the posts from the bottom of the trench to the top of the posts. The

Contractor is to install the fabric as required to encase trench and drape over top of fence by 1-foot minimum. The fabric is to be secured to the posts and wire mesh a minimum of every 6-inches vertically and one foot horizontally. The Contractor is to then backfill the trench over the geotextile fabric to anchor it in place.

The Contractor is to maintain the fence by inspecting it after each rainfall and\or during a heavy or prolonged rainfall or as required by the Erosion Control Specialist. The Contractor shall make adjustments or repairs to the fence to prevent runoff from bypassing the ends of the fence, or by under cutting the trench in which the fabric has been installed. When LOD barrier also functions as a sediment control BMP, the Contractor is to remove the accumulated sediment before it reaches ½ the height of fence. The LOD barrier will be reported on the erosion control and sediment control inspection as required by the City.

The site boundary control may be removed after construction has received its final inspection approval or as approved by the Engineering Department.

The Engineer shall design the work covered under subsection 2.3 to meet the following technical specification section:

1. Section 02279 – Silt Fences

3.6 EROSION CONTROL

A. **General** – Permanent erosion control measures are those, which will be constructed to provide for long-term (2-5 year) protection of soils on the project. These differ from sediment control BMP. These measures include the following:

1. Mulch – When used with out vegetation, mulch is a temporary erosion control practice where materials such as grass, woodchips, wood fibers, straw, or gravel are placed on the soil surface. When used without biodegradable netting these materials act independently and are also very erode able. Therefore, the depth of mulch criteria is as indicated in the chart. The LS factor in the USLE or the RULSE dictate when the slope length increase so does the depth of the mulch. The advantages of using mulch are:

    a. Mulch slows the water down, thus increasing the time of concentration for storm water calculations.
    b. Provides protection for the germination and survival rate of seeds and seedlings.
    c. When used with a biodegradable netting a matt effect can be accomplished.

MULCH APPLICATION RATES			
Type of Mulch	Mulch Rate (tons/acre)	Land Slope (percent)	Slope Length Limit (Feet)
Straw	1.0	1-5	200
	1.0	6-10	100
	1.5	1-5	300
	1.5	6-10	150
	2.0	1-5	400
	2.0	6-10	200
	2.0	11-15	150
	2.0	16-20	100
	2.0	21-25	75
	2.0	26-33	50
	2.0	34-50	35

MULCH APPLICATION RATES			
Type of Mulch	Mulch Rate (tons)	Land Slope (%)	Slope length limit (feet)
Crushed Stone ¼ to 1-1/2 inch	135	< 16	200
	135	16-20	150
	135	21-33	100
	135	34-50	75
	240	< 21	300
	240	21-33	200
	240	34-50	150
Wood Chips	7	< 16	75
	7	16-20	50
	12	< 16	150
	12	16-20	100
	12	21-33	75
	25	< 16	200
	25	16-20	150
	25	21-33	100
	25	34-50	75

*Note: Slope length limit specified is the length of slope for which the mulch rate specified is effective slope length. Mulch is to be anchored by the use of a photodegradable extruded plastic netting and stakes to anchored mulch to ground or with an appropriate tackifier.

2. Hydro Mulch – May be used when specified by the Effective Planting Plan. The Contractor shall follow written recommendation of the Hydro-seeder and the hydro-mulch recommendations are to be on site at all times and available to the Engineering Department at all times. The recommendations shall address the following:

a. Type of soil on slope to be protected
b. Percentage of slope
c. Application rate
d. Maximum wind speed

3. Tackifiers – Tackifiers are defined as being chemical stabilization practices, often referred to as a chemical mulch, soil binder, soil palliative. Chemical stabilization can be used as an identified by the effective Planting Plan. Asphaltic tackifiers are not allowed. The application rates and procedures recommended by the manufacturer of a chemical stabilization product shall be followed to prevent the products from forming ponds and from creating large areas where moisture cannot get through.

4. Blankets - Manufactured blankets have made the process of mulching convenient and cost effective for the developer or builder. Commonly referred to as erosion control blankets, mulch blankets or soil retention blankets, their function is the same.

   a. To provide a convenient and inexpensive method of proving protection to the soil against erosion.
   b. Provide a growing environment for the revegetation process from germination to established growth.

   Due to the wide range of products, erosion and vegetation characteristics the blankets are allowed to be installed when the following conditions are met:

   a. Blankets are used within the parameters of manufacturer recommendations.
   b. Produces a site specific staking or stapling pattern.
   c. Produces acceptable soil loss results based on the Revised Universal Soil Loss Equation for their blanket.
   d. The seed supplier's written recommendation that this is the protection they recommend for the vegetation that is proposed on the site.
   e. The LS factor is satisfied when used on slopes greater than 50 feet.

   The Engineer shall design the work covered under subsection 2.5 to meet the following technical specification section:

   1. Section 02272 – Fabric, Erosion Control Mats and Geotextiles

5. Straw Mulch - Straw mulch is anchored or punched in by using a tracked construction vehicle. Straw mulch is to be applied at a rate of 2 ½ tons per acre.

   The Engineer shall design the work covered under subsection 2.5 and Appendix B to meet the following technical specification section:

   1. Section 02935 – Crimped Straw

3.7 RETAINING WALLS

A. **General** – Where insufficient space is available for construction of a complete slope or where obstacles are in the way, retaining walls may need to be constructed to retain the earth and limit the amount of erosion, which might be experienced. If the wall is 48-inches or greater, the wall is governed by the International Building Code (IBC). Such wall will need to be designed by a licensed civil engineer, registered in the State of Utah.

The Engineer shall design the work covered under subsection 2.5 to meet the following technical specification section:

1. Section 02277 – Segmental Block Retaining Wall
2. Section 04220 – Concrete Unit Masonry

3.8 LANDSCAPE IRRIGATION SYSTEM

A. **General** – In cases where soil erosion control measures are selected by the Developer to meet his project needs, a landscape irrigation system will need to be designed and constructed. The design of such systems shall be done by a licensed landscape architect, registered in the State of Utah and shall be reviewed and approved by the City prior to construction.

The Engineer shall design the work covered under subsection 2.15 and Appendix B to meet the following technical specification section:

1. Section 02811 – Landscape Irrigation System

3.9 CONCRETE STRUCTURES

A. **General** – The design of concrete structures related to grading, erosion and sedimentation control and revegetation shall be performed by a registered civil engineer. The design shall take into account the following technical specifications. Preliminary design and final design shall be reviewed and approved by the City prior to finalizing the projects for construction.

The Engineer shall design the work covered under subsection 2.5 and Appendix B to meet the following technical specification section:

1. Section 03100 A – Concrete Formwork
2. Section 03102 – General Concrete Construction
3. Section 03200 – Reinforcement Steel
4. Section 03300 – Cast-in-Place Concrete
5. Section 03303 – General Concrete
6. Section 03304 – Minor Concrete

3.10 RIPRAP

A. **General** – Riprap is a layer of stone or rock designed to protect and stabilize the surface of the soil from erosion from water or wind. Riprap may be use to stabilize cut and fill slopes, channel slopes and bottoms, inlets and outlets for culverts, bridges, slopes drains and shorelines to due wave action. The thickness of the riprap for slope protection shall be in accordance of section 3.6 Erosion Control.

Riprap is classified as either graded or uniform. Graded riprap includes a wide range of stone or rock sizes. Uniform riprap consists of stone or rocks approximately the same size. Graded riprap is preferred since it provides a dense, flexible cover. Riprap sizes are designed by either the mean diameter or the weight of the stones.

Proper slope selection and surface preparation are essential for successful long-term functioning riprap. Adequate compaction of fill areas and proper use of filter blankets are necessary.

The Engineer shall design the work covered under subsection 2.5 and Appendix B to meet the following technical specification section:

1. Section 02275 – Riprap

3.11 RETENTION/DETENSION BASINS

A. **General** – The design of regional and on-site retention/detention basins shall be performed in accordance with the City's current Storm Drainage and Flood Control Design and Construction Standards, Master Drainage Plan and other pertinent master plans and studies.

The Engineer shall design the work covered under subsection 2.5 and Appendix B to meet the following technical specification section:

1. Section 02292 – Dam Embankment Construction
2. Section 02274 – Clay Liner
3. Section 02710 – Toe Drain
4. Section 11232 – Slide/Stop Gates
5. Section 00000 - Low Flow Pipe

3.12 STORM DRAIN SYSTEM

A. **General** – The design of storm drainage facilities, including pipelines, shall be performed in accordance with the City's current Storm Drainage and Flood Control Design and Construction Standards, master storm water management plan and other pertinent master plans and studies.

The Engineer shall design the work covered under subsection 2.5 and Appendix B to meet the following technical specification section:

1. Section 02712 – Storm Drainage System
2. Section 02750 – Storm Drainage System Testing
3. Section 02606 – Manholes
4. Section 02617 – Reinforced Concrete Pipe
5. Section 02618 – Reinforced Concrete Pressure Pipe
6. Section 11231 – Flap Gates

3.13 PERMANENT SEEDING

A. **General** - This practice will establish perennial and permanent seeding for a site where development is complete or will have no further disturbance. This practice is for an area

that has been brought to final grade within 21 days of initial disturbance and satisfies one of the conditions of the re-vegetation bond.

1. Installation Specifications

   a. Install berms or swells to prevent concentrated flows from adjacent properties.
   b. Prepare seed bed should be granular, loose, uniform grades to 2-4 inches in depth.
   c. Surface Roughing if the rainfall causes the soil surface to become sealed or crusted, loosen it just prior to seeding by discing, harrowing, raking or other suitable methods.
   d. Apply fertilizer as required by existing soil evaluations.
   e. Mulch: The Contractor will obtain a written statement and recommendations from the seed supplier or other knowledgeable entity, comparing the types of vegetation and the type of mulch being used. The seed supplier written statement will specifically address the analysis of the denseness of the blanket with growing characteristics of the proposed seed, i.e. as the seed germinates, the broadleaf plant will cause tenting due to the denseness of the mulch.

2. Seed Mix - The following seeds will be included in the proposed seed mix.

   Sodar Streambank Wheatgrass — Agropyron, riparium

   This a native sod grass of the Northern Great Plains plant growth region and the western intermountain area. It tolerates drought and spreads rapidly to form a good ground cover. It appears early and resembles thick spike wheatgrass. It is used widely as a low-growing, low maintenance cover. This is useful for roadside seeding, recreation areas, disturbed areas, and other sites where a low maintenance turf is desired.

   Nezpar, Indian Ricegrass — Oryzopsis hymenoides

   This grass is dense tufted perennial with upright stems. It is widely distributed over the west where it is one of the most drought-enduring native range grasses. It grows on semi deserts, sand dunes, sandy plains, canyons, hillsides, foothills, exposed ridges, and dry, sandy, rocky, or granulated shale sites. It is one of the first species to become established on disturbed sandy sites. This species has excellent seedling vigor and is easily established. Birds, especially mourning dove and pheasant, and small rodents relish the plump nutritious seeds.

   This is an important bunch grass of the intermountain region. However, the seed is generally available in limited quantities.

   The Engineer shall design the work covered under subsection 2.5 and Appendix B to meet the following technical specification section:

   1. Section 02933 – Seeding

SECTION 4.0

PLAN PREPARATION

4.1 GENERAL

The Engineering Department has established procedures, which must be followed in the preparation of engineering drawings and other plans. Deviations from these requirements, unless specifically authorized, will be cause for rejection by the Engineering Department. All engineers preparing plans should have in their possession a complete set of these Standards. All work shall be in ink on mylar sheets and digital copies of this work will be provided to the Engineering Department upon completion of the project. All projects constructed in the City will conform to these Standards.

The engineer has a distinct responsibility to follow the progress of the work and to submit change orders to the drawings and to incorporate "as-built" information on the drawings.

It should be understood that the responsibility for accuracy and completeness of the drawings rests with the developer's engineer. By signing the drawings, the City Engineer attests to the fact that they have been reviewed by the City and that the Planning Commission has authorized construction. By signing the drawings the City Engineer does not replace the professional liability of the professional engineer who prepared the drawings. The professional engineer who has prepared the studies, design, and drawings associated with this work is to sign and stamp these documents as required by State law.

4.2 PLAN PREPARATION RESPONSIBILITY

Refer to subsection 1-1 and 2.1.B. Design Professionals Qualifications for this information.

4.3 SHEET SIZE AND MARGINS

Overall dimensions of each sheet are 24x36-inches. Margins are to be 2-inches on left, all others ½ - inch.

4.4 SIGNATURE BLOCKS

All sheets of the drawings shall have a approved signature blocks. The approval blocks shall be signed before any construction occurs. Any changes to the plans after initial approval shall be shown as revisions and are required to be approved by the City Engineer.

4.5 COVER SHEET

This shall be the first sheet in the set and shall contain:

A. **Index Map**. An index map with an overall plan at a scale of one inch = 300 feet showing general layout of work, named streets, subdivision boundaries, lot boundaries and numbers, a sheet index and other pertinent information. Care must be exercised to make sure scale and orientation are correct since these index maps are used in the City's geographical information system for other purposes.

B. **Vicinity Map**. A vicinity map with a scale of one inch = 1,000 feet showing subdivision boundary, streets, adjacent subdivisions, major streets outside of subdivision boundaries and the location of the bench mark.

C. **Bench Marks**. All bench marks used in the project shall be graphically shown on this sheet and the elevations, descriptions, locations, etc., spelled out as illustrated below:

B.M. No._____ Elev. _____F.B. _____Page_____

Type of Marker_____

Location_____

All elevations used in preparation of standard plans shall be based on Salt Lake County Surveyor's Office information.

D. **General Notes.** The general notes shall be shown on the cover sheet and need not be shown on the other sheets. The general notes shall include a note requiring compliance with these standards and 5 day notice prior to a preconstruction meeting and before beginning construction (see Section 4.11). Land disturbance notes are to appear on the grading plan. In some instances the land disturbance general notes may appear on a separate sheet. In these instances the grading plan will reference the general notes with lettering not less than 18 points and the sheets will have similar and consecutive numbering, starting with "G" i.e. For general notes refer to Sheet G-1 of G-4

E. **As-built Materials List** - On the cover sheet shall be a block to be used for as-built information. It shall be as follows:

MATERIAL LIST

Item	Supplier and/or Manufacturer	Model/ Type No.	No.

Prior to submittal of as-built drawings, the developer's engineer shall complete the pertinent information.

"As-built" certification is also required. The wording shall be as follows:

"AS-BUILT" CERTIFICATE

I hereby certify that the work shown on Drawing Number _____Sheet _____ through _____inclusive, marked "as-built" has been constructed in conformance with lines and grades as shown on said plans and referred specifications.

_____ _____

Registered Civil Engineer RCE No. Date

G. **City Engineer's Certification for Approval to Construct.** Appropriate designation for City Engineer approval to construct, located above title block (number and date to be completed by the Engineering Department).

Approved for Construction _____ Date_____

City Engineer

4.6 GRADING AND SEDIMENT CONTROL PLAN

A. **General** – Grading plans are to be submitted for review, prior to disturbance of land or vegetation. The City will issue a letter to proceed when the plans conform to the specifications herein. Specifications herein are to be considered minimum. During the review process the City could require additional information prior to issuing the letter to proceed.

The minimum submittal will consist of:

1. A plan review of the site.
2. Two sections through the grading project on the X and Y axis with details as required.
3. The dust control plan as required by the State of Utah, Department of Environmental Quality, Division of Air Quality is to be submitted as a separate drawings meeting the state's requirements.
4. A wet weather plan is required showing additional BMP's that will mitigate the affects of the wet weather on/to adjacent facilities. The intent is to keep streets, storm drains, and existing waterways free of sediment.
5. Detail sheets contain the proposed BMP's on the site. The details are to provide specific and detailed installation instructions to the Contractor to install said BMP's. The general description per manufacturer recommendations is not adequate or acceptable. The BMP's selection is to be flexible and addressed as the project proceeds and site conditions change.

B. **Plan View** – Show and identify the following:

1. The layout of the subdivision including streets, lot line easement lines, drainage channels, and under ground drainage systems. The layout is to be seen as a background (50%).
2. Existing contours including topographic features including but not limited to existing drainage channels, roads, and structures. Contours to be labeled with numeric elevations on a maximum of ten-foot intervals and shown as dashed lines. The City Engineer may change the required interval based on the slope of the property.

3. Finished contours of all proposed topographic features. Finished contours are to be more distinct than existing elevations. Contours to be labeled with numeric elevations on ten-foot intervals and shown as solid lines. The City Engineer may change the required interval based on the slope of the property.
4. Show area Limits of disturbance (LOD).
5. Indicated LOD barrier material, i.e. concrete Jersey barrier or silt fence.
6. Show construction phasing limits.
7. Show timetable construction phasing. Chart form is acceptable.

Example:

Phase	Start	Finish
1	May 15, 2006	September 2006
2	August 22, 2006	December 2006
3	March 1, 2007	September 2007

8. Identify areas in which the majority of the lot has been created with fill dirt.
9. Topsoil storage area(s), containment, and erosion control methods.
10. Retaining walls
11. Sediment BMPs satisfying the intent of retaining soil on the site and out of the streets, existing waterways, storm drain, including dust control 24 hours and seven days per week. Identify type and location of sediment control BMPs in two locations.

    a. The plan view
    b. In a chart on the same sheet as the plan view

Example:

Sediment Control BMP	Identification	Location of BMP	Site Condition
Silt Fence	SF – 1	South side of property	Bottom of Slope
Construction Entrance	CE – 1	North end of property	Adjacent

12. Show locations and direction of flows of existing and proposed swales, water courses, canals, ditches, springs, wells, culverts, storm drains, and storm water facilities. BMP are to be shown in the plan view and in chart form.
13. Show existing and proposed easements and ownership of said easements on residential lots.
14. Show location of any designated flood plains and/or wetland boundaries.
15. Show the staging area and BMP to control chemical and fuel spills.
16. Provide a minimum of two sections through property, one through the x-axis and one through the y-axis. Additional sections are required when:

    a. Cuts or fills over six feet.
    b. Identify locations of sensitive areas, i.e. wetlands or natural drainage courses that will be affected by the proposed grading.

17. Identify the dust control to be used 24 hours a day, seven days per week.
18. Location of concrete vehicle wash out area.
19. The calculation of amount of soil is being moved. This calculation is inclusive of imported, exported, or material used to balance the site. If the soil is being moved, dug, excavated, imported or exported, the calculation should reflect the same.
20. The existing and finish grades expressed in percent to be shown in the respective areas. Existing or finished grades over 30% will be distinctively shaded.
21. Survey Section indicators shown with corresponding sheet numbers.
22. General Notes to appear on Grading Plan.

    a. Contractor should perform earthwork in accordance with the City of South Jordan Land Disturbance Ordinance, the City's Standard Specifications, City of South Jordan Land Disturbance Design and Construction Standards, erosion, sediment, re-vegetation requirements, and the dust control plan as required by the State of Utah, Department of Environmental Quality, Division of Air Quality.
    b. The Contractor will perform earthwork in accordance with technical specifications outlined in the Land Disturbance Design and Construction Standards and the recommended earthwork specifications found in the report of geotechnical engineer, and the geotechnical investigation. In the event there is a conflict between the documents mentioned herein and City of South Jordan's erosion and sediment control requirements or the dust control plan as required by the State of Utah Department of Environmental Quality, Division of Air Quality, City of South Jordan's requirements and the State requirements will control.
    c. The sequence of construction is to be followed.
    d. Sedimentation BMP's shown on the erosion control and sediment control plans to be installed within the same working day the land disturbance occurs.
    e. Dust control BMP's are to be on site and implemented as soon as land disturbance occurs. The dust control as required by the State of Utah air quality plan is to be submitted with the grading plan as a separate drawing.
    f. All areas to be re-vegetated are to receive re-vegetation BMP's within 21 days of disturbance.
    g. If the existing grade is different from what is shown on this grading plan, stop work and contact the City of South Jordan, Engineering Department. Work is to remain stopped until the City's Engineering Department provides a written notice to resume work.
    h. The project owner is responsible for maintaining the streets, storm drains, and channels, ditches and swales free from debris, soil, mud, or other material that would cause a public safety concern, violate the City's UPDES permit, state or federal laws, or prevent the facility from operating.
    i. All concrete trucks are to use the designated washout area(s). Failure to comply will result in a work stop and the offender could be guilty of a Class C misdemeanor.

j. L.O.D. barriers are to be in place and maintained until written notification is received from the Engineering Department. The owner is responsible for maintaining L.O.D. barriers.

k. If disturbance occurs outside the L.O.D. work will stop and remain stopped until the written response is received from the City.

l. The owner is to be responsible for additional grading information as required throughout the remainder of the project.

C. **Grading Plan Sections**

1. Sections to be drawn to the scales indicated see Section 4.7. The profile to be displayed on an X and Y grid background.
2. Section to show existing grades, finished grade, property lines and drainage features.

4.7 EROSION CONTROL AND REVEGETATION PLAN

A. **General** - An erosion control plan is required for all land disturbances including but not limited to pioneering roads, residential subdivisions, commercial projects/subdivisions, temporary and permanent construction, roads and utilities.

The erosion control plan must be prepared and approved before final approval and before construction begins. The erosion control plan shall be submitted with the grading plan as required by local ordinances or be prepared as part of the storm water pollution prevention plan (SWPPP).

If the grading permit allows work to be done during the wet weather season, the permit may require a wet weather operating and erosion control plan. This plan must be approved prior to the commencement of any work and include all necessary temporary and permanent erosion control measures, including those to be followed should the work stop at any time during the wet weather season.

If the site or portion of the site is planned to be idle for more than 45-days, then vegetative stabilization must be accomplished within 7-days. The wet weather plan must include a plan for the immediate (within 24-hours of the first forecast of a storm front) installation of emergency erosion control measures.

B. **Guidelines for Erosion Control Plans** - The plan will consist of three parts:

1. A narrative, containing:

a. A brief description of the proposed land-disturbing activities, existing site conditions, and adjacent areas (such as creeks and buildings) that might be affected by the proposed clearing and grading;

b. A description of critical areas on the site - areas that have a potential for serious erosion problems, including the name, location and aerial extent of moderate and highly erodible soils and slopes on the project site;

c. The date grading will begin and the expected date of stabilization;

d. A brief description of the measures that will be used to control erosion and sedimentation on the site;

e. When these measures will be implemented;

f. A description of an inspection and maintenance program, with provisions for frequency of inspection, reseeding, repair and reconstruction of damaged structures, cleanout and disposal of trapped sediment, duration of maintenance program, and final disposition of the measures when site work is complete.

2. A map showing:

   a. Existing site contours at an interval and scale sufficient for distinguishing runoff patterns before and after disturbance;
   b. Final contours;
   c. A legend, if necessary;
   d. Limits of clearing and grading;
   e. Existing vegetation, such as grassy areas or vegetative buffers, that may reduce erosion or off-site sedimentation;
   f. Critical areas within or near the project site, such as streams, lakes, wetlands, or the aerial extent of erodible soils;
   g. The location and types of erosion and sediment control measures, including vegetative treatment used.

3. Plan details, including:

   a. Detailed drawings of erosion and sediment control structures and measures, showing dimensions, materials, and other important details;
   b. Design criteria and calculations such as design particle size for sediment basins and peak discharge for channel design and outlets;
   c. Seeding or vegetative specifications;
   d. Inspection and maintenance notes.
   e. Specification for surface roughing.

   The narrative and details should be placed on the erosion control plan map if possible.

C. **Plan Check** - The following items provide a general approach and guidelines that a review agency or plan checker might find useful:

1. Responsibility: It is not the responsibility of the plan reviewer to ensure that the plan is appropriate for the level of work suggested by the proposed project. The reviewer can only ensure that the plan meets the minimum standards set by the reviewing agency and its authorizing ordinance.
2. Communications: Encourage informal communications between the plan reviewer and the plan preparer. This will enable the reviewer to make informal suggestions that may save the developer money and the preparer time, and it may result in a better, more effective plan. It will also enable the preparer to explain and justify the plan.
3. Incomplete Plans: Do not review seriously incomplete plans. Send them back with a request for the missing information.
4. Required Information: Make sure all the required information has been submitted. A checklist can be used by both plan reviewers and plan preparers, however, checklists can encourage laziness. Having everything checked off does not necessarily mean that everything is in order.

5. Plan Concept: The concept should be examined first, starting with the general and moving to the specific. Does the plan make sense?
6. Schedule: Examine the construction schedule. Will grading be completed before the wet weather season or before the summer thunderstorm months? When will storm drainage facilities, paving, and utilities be installed in reference to the wet weather season? If grading will take place during months when there is a high probability of heavy rains, what extra precautions will be taken to protect against erosion, sedimentation, and changing drainage patterns (Is a wet weather plan necessary)?
7. Minimize Disturbance: Does the plan show areas that are not to be disturbed? If possible, native vegetation should be retained and stream buffer areas should be designated on the plan and flagged in the field. A well-conceived erosion control plan will minimize erosion by attempting to minimize disturbance and retain natural vegetation. A phased approach to development can assure that the extent and timing of grading does not exceed the contractors ability to perform erosion and sediment control.
8. Site Drainage: Make sure you understand where all drainage comes from on and above the site, where it goes, and how it traverses the site. For large sites, require or prepare a drainage area map. If drainage patterns are unclear, ask for clarification.
9. Sediment Basins and Traps: Locate all sediment basins and traps and define their tributary areas.
10. Erosion Control: Check the method used to prevent erosion. Hydraulic seeding and mulching may adequately stabilize some areas, but other areas, because of their proximity to sensitive features such as watercourses, or their steepness and erosive soil, may need far more intensive re-vegetation efforts. On steep and critical slopes, a reliable backup system for hydraulic planting, such as punched straw, bonded fiber matrix, or erosion control blankets is strongly recommended.
11. Channels and Outlets: Examine all drainage-ways where concentrated flows will occur. Be sure adequate erosion protection is provided both along channels and at channel and pipe outlets. Check the sources of runoff to be sure that all the runoff comes from undisturbed or stabilized areas or has been desilted by sediment basins or other sediment retention devices.
12. Miscellaneous: Look for haul roads, stockpile areas, and borrow areas. They are often overlooked and can have a substantial effect on drainage patterns. Have construction or access roads been surfaced with rock, as a minimum treatment, before the rainy season? Look at all points of vehicle access to the site and be sure mud and soil will not be tracked onto paved streets and that sediment-laden runoff will not escape from the site at these points. Pay particular attention to watercourses and their protection.
13. Plan Details: Once the plan concept has been shown to be adequate, check the details to be sure the concept is adequately described in the plans.
14. Structural Details: Be sure that sufficiently detailed drawings of each structure (sediment basin, dike, ditch, silt fence, etc.) are included so there is no doubt about location, dimensions, or method of construction.
15. Calculations: Determine if calculations have been submitted to support the capacity and structural integrity of all structures. Were the calculations made correctly? Non-engineered structures, such as straw bale barriers, do not generally need hydrologic calculations, however, supporting information such as drainage area and peak flow should be available if requested.

16. Vegetation: Review seed, fertilizer, and mulch specifications. Check quantities and methods of application to be sure they are appropriate and consistent with local guidelines. Are there stipulations so that ineffective re-vegetation and/or damage can be remedied immediately?
17. Maintenance: Be sure that general maintenance requirements and, where necessary, specific maintenance criteria, such as the frequency of sediment basin cleaning, are included. Are there stockpiles of spare materials (filter fabric, straw bales, stakes, gravel, etc.) to repair damaged control measures? Routine maintenance inspections should be part of the plans.
18. Contingencies: The plan must provide for unforeseen field conditions, scheduling delays, and other situations that may affect the assumed conditions. For example, straw mulch may need to be installed as an emergency measure during severe summer thunderstorms, or sediment basins may need to be cleaned more frequently.
19. Technical Review: Where applicable, the erosion and sediment control plan should be reviewed by the soils, certified professional in erosion and sediment control (CPESC), or geotechnical consultant for the project.
20. Signature: Where applicable, the erosion and sediment control plan should be signed by the preparer who shall be a qualified professional.

4.8 GRAPHIC SCALES AND NORTH ARROW

All plan and profile sheets shall contain:

A. A graphic scale, horizontal as well as vertical, illustrated such that a true representation is produced when the plans are reduced in size, and they shall be as follows:

Horizontal 1inch = 40 feet
Vertical 1inch = 10 feet *

*Double scale drawings (i.e., 1inch = 8 feet) may only be submitted where the predominant slope of the existing ground surface or any one sheet exceeds 15 percent. In such cases, the words "Double Scale" shall be boldly shown.

B. A north arrow oriented toward the top or to the right only, or as approved. Generally, north shall be oriented towards the top or right hand side of the sheet.

4.9 PROCEDURE FOR APPROVAL

Approval for improvement plans consists of two phases. Each phase consists of a series of requirements, which must be met before final acceptance.

A. Requirements for authorization of construction (see Section 5 of these Standards).

B. Requirements for final acceptance (see Section 11 of these Standards).

4.10 PLAN CHECKING LIST

The following list is intended as a guideline to assist the preparer; it is not represented to be a complete list of requirements.

Check List
Plan Checking and Project Requirements
Grading

Cover Sheet.

- Standard size, title block, signature block. Revision and engineer's block
- Key and vicinity map
- Include lot numbers and lot lines. Sheet index
- Adjacent subdivisions and street layout
- Bench mark
- Design and as-built certificates
- General notes
- Blue stake alert note.
- Engineer's stamp and expiration date

General Design

- Conform to master plans
- Check for right of way and easements
- Compliance with other utility company requirements
- Check for existing irrigation canals
- Check for compliance with City's surveying monumentation

Grading and Sediment Control Plan Submittal

- A plan view of the site
- Screened background layout of project
- Existing contours (screened)
- Finished contours shown and labeled
- L.O.D. shown, material identified and labeled
- Indicate construction phase lines
- Time table chart of phasing
- Areas with fills over four feet
- Topsoil storage areas shown and identified
- Sediment BMP shown on plan view sheet and in chart
- Existing drainage features
- Existing wetlands identified
- Show staging area and provide details
- Two sections through the grading project on the x and y axis details
- Dust control plan on separate sheet
- Wet weather plan using BMP
- Concrete washout area

Plan & Profile Sheets

- Graphic scales
- North arrows
- Roadway stationing left to right

- Elevations of centerline of roadway, curb and gutter on each side
- Proper burial
- Curve data if there are curves
- Street, curb dimensions, street names
- Lot boundaries
- Easements including line bearings
- Angle points - show deflection angle right or left moving up station

Administrative Before Construction of Main(s)

- Cost estimate
- Inspection and engineering review fee. Bonds and insurance.
- SWPP & Notice of Intent

Administrative During or After Construction to Main(s)

- Change Order Fee
- Meter installation requests

Check List
Plan Checking and Project Requirements
Erosion, Revegetation and Sedimentation

The following checklist is provided to help the plan preparer and reviewer make sure that all the necessary elements of a comprehensive plan have been addressed.

Narrative

Project description: A brief description of the nature and purpose of the land-disturbing activity and the amount of grading involved.
Existing site conditions: A description of the existing topography, vegetation, and drainage.

Adjacent areas: A description of neighboring areas, such as streams, lakes, residential areas, and roads that might be affected by the land disturbance.
Soils: A brief description of the soils on the site including erodibility and particle size distribution (texture).
Critical areas: A description of areas within the developed site that have potential for serious erosion or sediment problems.
Erosion and sediment control measures: A description of the methods that will be used to control erosion and sediment on the site. Temporary erosion control, and temporary sediment control measures. Who will be responsible for implementation? Financial guarantees may be required to assure proper implementation
Permanent stabilization: A brief description of how the site will be stabilized after construction is completed.
Maintenance: A schedule of regular inspections and repairs of erosion and sediment control structures, and the person responsible for maintenance.

Maps

The following information should appear on one or more maps:

Existing contours: Existing elevation contours of the site at an interval sufficient to determine drainage patterns.
Preliminary and final contours: Proposed changes in the existing elevation contours for each stage of grading.
Soils: Boundaries of the different soil types within the proposed development.
Existing vegetation: Locations of trees, shrubs, grass, and unique vegetation.
North arrow
Vicinity Map
Critical areas: Areas within or near the proposed development with potential for serious erosion or sediment problems.
Existing and final drainage patterns: A map showing the dividing lines and the direction of flow for the different drainage areas before and after development, and how well off-site water passes through the site without contamination.
Limits of clearing and grading: A line showing the areas to be disturbed, and proposed buffer-strips.
Erosion and sediment control measures: Locations, names, and dimensions of the proposed temporary and permanent erosion and sediment control measures.
Storm drainage system: Location of permanent storm drain inlets, pipes, outlets, and other permanent drainage facilities (swales, waterways, etc.), and sizes of pipes and channels.

Details

Detailed drawings: Enlarged, dimensioned, and typical drawings of Best Management Practices such as erosion control blankets, energy dissipators, grass-lined channels, and sediment barriers.
Seeding and mulching specifications: Seeding dates, seeding and mulching rates in pounds per acre, and application procedures.
Maintenance program: Inspection schedule, spare materials needed, stockpile locations, and instructions for sediment removal and disposal and for repair of damaged structures.
Master Plans – Check master plans to ensure compliance of project with the City's most current master plan(s).

Calculations

Calculations and assumptions: Data for design storm used to size pipes and channels and sediment basins and traps, design particle size for sediment trap efficiencies, basin discharge rates, size and strength characteristics for filter fabric, wire mesh, fence posts, etc., and other calculations necessary to support drainage, erosion, and sediment control systems.
Attachments: The erosion control plan should accompany the grading plan.

4.11 STANDARD LANGUAGE FOR DEDICATION OF FACILITIES TO CITY

Please refer to current city's policy and standards with the approval of the City Engineer and the City Attorney.

4.12 STANDARD NOTES

The standard notes shown on the following page(s) should be included on the cover sheet as applicable. They are subject to change to suit the needs of the Engineering Department.

GENERAL GRADING NOTES

1. Contractor shall notify City of South Jordan Engineering Department at (801) 254-3742 five business days prior to commencing construction so that a preconstruction meeting can be scheduled.

2. All construction shall conform to City of South Jordan's Land Disturbance Design and Construction Standards as adopted and amended.

3. The contractor shall contact Blue Stakes (801.208-2100) or (811) for marking of existing utilities prior to performing any excavation. Call for underground locating two working days prior to any excavation.

4. Contractor shall perform earthwork in accordance with City of South Jordan Standard Specifications, Land Disturbance Design and Construction Standards and the recommended earthwork specifications found in the report of geotechnical investigation dated
_____, 20____ by _____.

5. The existing topography shown on these plans is based on aerial topographic mapping performed by _____ for _____ dated _____, 20 _____.

6. The Owner shall provide an erosion control plan and obtain all permits required by the City of South Jordan, Salt Lake County, and the State of Utah for erosion control. The Contactor shall be solely responsible to provide all temporary erosion control and maintenance, and shall provide erosion and sediment control forms to the City. For additional erosion control information, see 'Erosion Control/Re-vegetation Plan' sheets. See section 4.7.
7. Subsurface investigations have been conducted at the site of the work. Copies of the soils report may be obtained at the office of _____. Soils investigations were conducted for design purposes only and the data shown in the reports are for subsurface conditions found at the time of the investigation. The Owner and Engineer disclaim responsibility for the interpretation by the Contractor of data, such as projection or soil bearing values and profiles, soil stability and the presence, level and extent of underground water for subsurface conditions during construction operations.

4. CAUTION: Only City of South Jordan Public Works Department personnel are to operate any valves on the culinary water system.

GENERAL EROSION, REVEGETATION AND SEDIMENTATION NOTES

1. Contractor shall notify City of South Jordan Engineering Department at (801) 254-3742 five days prior to commencing construction so that a preconstruction meeting can be scheduled.

2. All construction shall conform to City of South Jordan's Land Disturbance Ordinance and Land Disturbance Design & Construction Standards as adopted and amended.

3. The contractor shall contact Blue Stakes (801.208-2100) or 811 for marking of existing utilities prior to performing any excavation. Call for underground locating two working days prior to any excavation.

SECTION 5.0

FEES, CHARGES AND REQUIREMENTS FOR AUTHORIZATION OF CONSTRUCTION

5.1 GENERAL

The authority for fees/charges is generally established in the City of South Jordan Municipal Code. Specific fee/charge amounts are adopted by City Council Resolution and are generally updated by resolution on a yearly basis. All fee/charge amounts are adopted following the conducting of public hearings by the City Council as required by law. Copies of the current documents are available from the City Recorders Office.

5.2 SUBMITTAL OF PRINTS (PLAN CHECK)

The Developer is responsible for submitting two sets of the prints of the proposed roadway improvements and one copy of the final subdivision plat, where appropriate to the Engineering Department. Plans illustrating an incomplete design and drafting detail may not meet minimum standards and may be just cause for a rejection of the first plan check. The developer or developer's engineer shall submit preliminary plans completed in accordance with these standards. The developer and the developer's engineer should be aware that most projects involve several plan check/ submittals before the drawings are deemed to be in satisfactory condition.

5.3 LAND DISTURBANCE PERMIT APPLICATION FEE

Land disturbance activities, which require a Land Disturbance permit as defined in Title 16.44 – Land Disturbance Ordinance are required to file and pay the fee associated with this permit.

5.4 SPECIAL PROVISIONS

If there are unusual conditions which would require substantial deviation from the City's Land Disturbance Design and Construction Standards, particularly with respect to other sensitive lands, such deviations are to be submitted in writing prior to preliminary plat review and/or development project approval, or in any case prior to submittal of the first plan check.

5.5 EASEMENTS

Any easements necessary must have deeds submitted for checking at this time or must be shown on the subdivision plat before recordation

5.6 AGREEMENTS, BONDS, AND INSURANCE CERTIFICATES

City staff will provide the developer with the proper forms and developer shall submit the following:

A. **Insurance Policy Certificates.** Insurance certificate with limits as stated in the "Agreement". Attention is particularly called to the City's requirements concerning submittal of an "Accord" form. The insurance certificate shall include general liability, auto liability and worker's compensation insurance in amounts as required by the Engineering Department or City Attorney. The City, its officers, employees and agents,

shall be named as additional insureds. The notice of cancellation period must be no less than 60 days. Any reference in the cancellation clause to "endeavor to" or "but failure to mail such notice shall impose no obligation or liability of any kind upon the company" must be deleted. Also, the words "This certificate is issued as a matter of information only and confers no rights on the certificate hold" must be deleted. If disclaimers cannot be deleted from the Accord form, then a signed warranty letter must be attached to the certificate.

B. **City's Accord Form.** The City reserves the right to request that the City's Accord form be utilized.

C. **Performance Bond.** Security is required to pay for stabilization of the site should work be abandoned or stopped before construction is completed. The Engineering Department and City Attorney's office will determine the amount and form of the security and of the form approved by the City Attorney's office. When an agency of the State, federal, or local government provides at least 20-percent of the financing for the project, an instrument of credit from that agency is acceptable.

1. Form – The security can be one of the following:

   a. Bond by a duly authorized corporate surety, or
   b. Letter of credit
   c. Escrow
   d. Cash

2. Amount – The amount of security shall be the full cost of erosion and sedimentation control measures for the project. The estimate of this cost shall be prepared by the developer, and reviewed and approved by the Engineering Department. The City reserves the right to change the estimated amount required.

3. Release – The security will be released upon issuance of a certificate of completion or upon voluntary relinquishment of the permit, provided provisions of the Land Disturbance Ordinance have been complied with and no administrative or legal action against such security has commenced.

D. **Payment Bond**. A Payment Bond (Labor and Materials) in triplicate and notarized, equivalent to the estimated cost based upon the City's most current Resolution.

5.7 APPROVAL FOR CONSTRUCTION

In any Land Use Zone, except Planned Community Zone, upon receipt of all documents, bonds, fees and checking for all documents, bonds and fees, the staff shall prepare a memorandum to the City's Planning indicating the Engineering Division's concerns have been addressed and the project is ready for City Council or Planning Commission action, from an Engineering Department perspective. City Engineer or designee may waive the requirement of obtaining final site plan or final subdivision plat approval as is deemed appropriate for a particular project. City Engineer may require a letter of indemnification as part of that approval.

In any Land Use Zone, except Planned Community Zone, prior to approval by the Planning Commission, the developer/developer's engineer will submit four (4) sets of final drawings (blue line prints) to the Engineering Department to be stamped "Approved for Construction", once the

Planning Commission approves the project. The Engineering Department will sign the original plans only after approval by the Planning Commission, and will notify the developer's engineer that the plans are signed and available. These prints will be stamped "Approved for Construction" on each sheet and one set will be returned to the developer, which must be kept by the contractor on the project site at all times. The other three sets will be distributed to: one (1) to the Engineering inspector, one (1) to the City's project engineer, and one (1) to the permanent Engineering Department file. No work is permitted which is not shown on these approved plans, except minor field changes approved by the Engineering inspector, until a change order has been processed by the Engineering Department and new "Approved for Construction" sheet(s) is (are) issued. The original drawings will be returned to the developer's engineer until they are "as-built", at which time the originals become the City's property. City Engineer or designee may waive the requirement of obtaining final site plan or final subdivision plat approval as is deemed appropriate for a particular project. City Engineer may require a letter of indemnification as part of that approval.

No person, developer, builder, contractor in a Planned Community Zone shall cause to be commenced or commence land disturbance, grading, relocation, or any other land disturbance activity. No person shall import or export any earth materials to or from any site or within the site, without first obtaining a land disturbance permit. No land disturbance permit shall be issued for any site or project within a Planned Community Zone without City approved land disturbance or grading plans. the developer/developer's engineer will submit four (4) sets of final drawings (blue line prints) to the Engineering Department to be stamped "Approved for Construction", once the Planning Commission approves the project. The Engineering Department will sign the original plans only after approval by the Planning Commission, and will notify the developer's engineer that the plans are signed and available. These prints will be stamped "Approved for Construction" on each sheet and one set will be returned to the developer, which must be kept by the contractor on the project site at all times. The other three sets will be distributed to: one (1) to the Engineering inspector, one (1) to the City's project engineer, and one (1) to the permanent Engineering Department file. No work is permitted which is not shown on these approved plans, except minor field changes approved by the Engineering inspector, until a change order has been processed by the Engineering Department and new "Approved for Construction" sheet(s) is (are) issued. The original drawings will be returned to the developer's engineer until they are "as-built", at which time the originals become the City's property.

No construction is to occur before the plans are signed and before the proper five day Engineering Department notification has been given. This notification will allow time for a preconstruction meeting with all interested parties.

The Engineering Department and the developer have a direct relationship via the documents outlined above. Therefore, to the extent possible, correspondence and verbal communication are to be between these parties rather than between the Engineering Department and the contractor or subcontractors where the developer is excluded. In some instances, when the developer or his representative is not available, a work stop order could be placed on the project until the developer; makes himself available.

5.8 SPECIAL CHARGES

If there are items requiring special approval, the Engineering Department may require deposition of funds or agreements for funds in the future, to provide for operation and maintenance of an

extended re-vegetation plan i.e., the planting of seedlings in a deep fill area. Review of this work by the Engineering Department will be charged per Council Resolution.

SECTION 6.0

CONSTRUCTION STAKING

6.1 GENERAL REQUIREMENTS

Construction staking is the responsibility of the developer, his engineer or contractor. When the term 'construction staking' is used, it should be remembered that it encompasses construction roadway, pioneering roads, limits of disturbance, which may not involve any staking, such as survey flagging to be used in heavy vegetated areas. Stakes or marks will be set at no greater interval than 50-feet on straight alignments, in 3o-percent and greater slope areas, staking or flagging will be based on the principle of line-of-site as required by the Engineering Department.

The actual installation of construction stakes or flagging is to be preformed to minimize the disturbance of vegetation, existing grade and other sensitive geological and environmental features.

The information contained on the construction stake shall clearly indicated station, station description, existing grade, finished grade, amount of cut or fill, offsets, and setbacks.

6.2 PRESERVATION OF STAKES

Construction stakes or construction markings shall be carefully preserved by the contractor until after the staking or flagging can be reviewed and approved by the City. If two or more consecutive stakes are knocked out during construction, new stakes shall be set at the contractor's expense.

6.3 "AS-BUILT DRAWINGS"

The stationing and staking adjustments due to field conditions should be shown on as built drawings.

SECTION 7.0

CONSTRUCTION

7.1 GENERAL REQUIREMENTS

This section describes the use of materials and workmanship to be employed in any land disturbance including but not limited to residential building sites, commercial site, parks, subdivisions, as well as City projects. The developer/ engineer shall prepare such general and special specifications as are necessary to define the nature and location of the work, contractual arrangements, payment for work and any other matters concerning the owner or his contractor; these items are not discussed within the standards presented here.

A. **Use of this Section** - The construction section is intended to highlight the features of construction, which are deemed to be most significant. In any construction activity, when there is a conflict between the recommendations of the manufacturer of a product, and the specifications herein and/or county, state or federal regulations the more stringent, should apply.

   Finally, Section 3.0 of these Standards contains material descriptions and the developer/contractor should use that section along with this section and the respective plates as a reference. Section 9.0 describes testing procedures and requirements.

B. **Quality of Materials** - Materials and equipment to be incorporated into the work shall be new and meet quality control standards of the manufacturer, no seconds allowed on the project. In case a reference is not clear as to which of several available grades is desired, the highest quality material shall be used. When construction bids are received directly by the City such bids shall show the proposed pipe material and the manufacturer's name, if more than one type is allowed.

   The Contractor shall have at the job site certified copies of factory or laboratory test reports showing the strength characteristics of any materials used in the work. For all reinforced concrete work, the contractor shall furnish in advance of pouring concrete and, if requested, the mix design and calculated concrete strength as prepared by the concrete supplier.

C. **Substitutions** - Where articles or materials are specified by brand or trade name, alternate materials or articles equal to those specified may be approved provided the request for approval is in writing accompanied by supporting data, in ample time to permit investigations without delaying the work, based on the following:

   1. The alternate product documentation performance typical of the site-specific design parameters. Documentation of similar products will not be accepted. The intent is to have the design parameters be the controlling factors in specifying a product. It is the sole responsibility of the manufacturer to work with the design engineer and/or to determine the design parameters.

   2. On projects that the City has a financial interest, all alternate product submittals shall include a value engineering cost analysis.

Unless substitutions have received prior to approval, no deviation from the Standards will be allowed.

D. **Quality of Workmanship** - All work will be done by persons experienced in the specific work, under competent supervision and in a first class manner to the City's complete satisfaction. When work is being done directly for the City, the contractor in the proposal shall name each subcontractor and no substitutions will be permitted without prior approval.

E. **Defective Work**

- Site Work - Any defective materials or workmanship, which shall become evident within one year after field acceptance of completed work shall be replaced or repaired without cost to the City. Refusal of the contractor to correct defective work, which is clearly his responsibility, will be considered just cause for exclusion from performing future work for the City. Such exclusion does not impair the City's right to bring legal action to correct the deficiencies as well as to withhold release/exoneration of cash/letter of credit bond and payment bond.
- Sediment Controls – Any defective materials or workmanship, which shall become evident, is to be replaced or repaired without cost to the City immediately. Refusal of the contractor to correct defective work, which is clearly his responsibility, will be considered just cause for exclusion form performing future work for and/or in the City. Such exclusion does not impair the City's right to bring legal action to correct the deficiencies as will as to withhold release/exoneration of cash/letter or credit bond and payment bond.
- Re-vegetation – Defective work shall be governed by the prescheduled release dates of the re-vegetation bond as described in Resolution 97-73. All damage resulting from the contractor's refusal to repair the defective work will be the sole responsibility of the contractor of the owner.

F. **City Inspection, Field Acceptance and Guarantee** Period - The developer's engineer is responsible for the daily inspections and submitting inspection forms, compaction data and other City required information. The developer's engineer is to notify the Engineering Department a minimum of 24 hours before final inspection is requested. The Engineering Department has the responsibility to respond in a timely manner, which is considered fair and responsible, but within five working days or request.

The Engineering Department is responsible for all final acceptance inspections of all grading, sediment control, erosion control and revegetation work. All such work shall be available for City observations and comments at all times. It will be the contractor's responsibility to provide a working day's notice to the Engineering Department prior to the start of any work. Scheduling a preconstruction meeting requires a minimum of five working days. Failure to provide proper notification may delay the preconstruction meeting and the starting date of the project since the Engineering Department may not be able to inspect the work and cannot accept any work for which a preconstruction meeting and/or inspection has not been arranged. It must be emphasized that the primary responsibility for compliance with all City requirements and standards rests with the developer. Any acceptance of a portion of the work by a construction inspector does not relieve the developer of this basic responsibility.

Field acceptance is made by the inspector; however, the 18-month guarantee period for all work shall begin as of City Engineer acceptance. As mentioned in Section 7.I.E., any deflective site work or grading work discovered during this period shall be repaired or replaced but a new 18-month period will not begin for the corrected work.

All holiday or weekend inspection will be subject to additional charges as detailed in the City's standard rates for such work.

G. **Public Relations** - The contractor shall conduct its affairs in a manner that will lessen the disturbance to residents in the vicinity of the work. In this regard, standard working hours as specified in the Municipal shall be observed unless prior approval is received, which also includes City observed holidays. The job site shall be maintained in a condition, which shall bring no discredit to the City or its personnel, and all affected private improvements shall be restored to at least their original condition. Saturday work may be provided for only by approval of the Engineering Department and the contractor will be responsible for payment of all overtime and other charges associated with having City staff available for inspection and other coordination. Special care must be taken in regards to school zones, including sidewalks. These zones must be maintained open at all times and any alterations to existing shall be coordinated with the School District and the City's Engineering Department.

7.2 CONSTRUCTION SEQUENCE – EROSION /SEDIMENT CONTROL

A. This portion of the document is to familiarize the permit holder/contractors and subcontractors with the general erosion/sediment controls required of all projects. Site-specific requirements contained on the City approved construction plan are in addition to these requirements. These requirements are as follows:

1. Read and follow the sequence of construction shown on the approved plans. Any modifications must be obtained from the Engineering Department prior to deviating from the sequence of construction.

2. The limits of disturbance must be field marked prior to any land disturbance.

3. Within a working day of disturbance, the erosion/sediment control measures must have been installed.

4. Provisions to control dust are to be on site and operational prior to any land disturbance and are to meet the State's permit requirements. The State's dust control permit is to be available at the construction trailer at the site.

5. An erosion/sediment control preconstruction meeting is required prior to any land disturbance.

6. At the erosion/sediment control preconstruction meeting, a review of the area of disturbance and the proposed vegetation removal will be reviewed and approved by the Engineering Department.

7. The permit holder must obtain written approval from the Engineering Department, certifying that the limits of disturbance, dust control measures and

tree protection are correctly marked and installed or ready to implement prior to commencing any clearing.

8. Erosion/sedimentation control best management practices will remain in good working order through the entire project and until all disturbed soil has been stabilized to prevent erosion. Written approval must be obtained by the Engineering Department certifying all disturbed areas.

9. All disturbed areas will be reestablished as per these standards within 21 days of reaching the final grade.

10. Erosion/sedimentation control facilities require mandatory, periodic inspections throughout the construction and until all disturbed areas have been stabilized.

11. Erosion/sedimentation control facilities require regular, frequent inspection of not less than seven days or within 24 hours of a storm event or a snowmelt. Inspection will be documented by submitted the required information contained in the erosion and sediment control plan. Failure to fill out and submit said inspection forms to the Engineering Department would result in the issuance of a work stop order. Work stop order will not be released unless a special erosion and sediment control meeting is held.

12. Keep streets clean at all times. Written permission by the Engineering Department is required prior to washing streets.

13. A copy of these erosion/sediment control notes is to be posted at the site at all times. Failure to post said notes might result in a work stop order.

7.3 PERMITS

The following permits may be required of the contractor:

A. **Excavation Permit** – Where construction will encroach into the public right-of-way or easements, the contractor shall obtain all necessary excavation permits. Within City of South Jordan right-of-way, the permit is secured from the Public Works Department. Within the County areas, a similar permit is required from the County. State roads require a permit from UDOT. Particular attention is called to Section 7.15 and the appropriate standard drawings.

B. **Explosives Permit** – Where the contractor anticipates the use of explosives in conjunction with the water construction, a blasting permit shall be first obtained from the City County and State agencies, and all nearby property owners shall be notified. These permits are discretionary and may not be given for a particular circumstance.

C. **Land Disturbance Permit** – The Contractor is responsible for obtaining a land disturbance permit from the Engineering Department and paying the applicable fees. The Developer shall prepare the necessary grading plans and drawings and submit the necessary reports from a registered geotechnical engineer prior to the permit being issued.

D. **Dust Control Permit** – The contractor is responsible for obtaining a Dust Control Permit from the Department of Environmental Quality Division of Air Quality and paying the applicable fees. The developer shall prepare the necessary Dust Control Permit and necessary drawings and submit the necessary plan and reports from an erosion control specialist prior to the permit being issued. The developer is hereby notified that the possession of a 404 permit does not constitute compliance until all details and BMP's have been reviewed by the City.

E. **Storm Water Pollution Prevention Permit (SWPP)** - The contractor is responsible for obtaining a SWPP Permit from the Department of Environmental Quality Division of Water Quality and paying the applicable fees.

F. **Salt Lake County Development and Construction Permit** - The Developer is to obtain and submit this permit to the City if the subdivision is within 100 feet of a critical flood area as defined by Salt Lake County. If the project is not within 100 feet of a critical flood area as defined by Salt Lake County, the Developer is to submit a letter from Salt Lake County to the City so indicating.

G. **Corps of Army Engineer 404 Permit** – The contractor is responsible for obtaining a grading permit from the Corp of Army Engineer or the Natural Resource Conservation Service and paying the applicable fees. The developer shall prepare the necessary plans, drawings, and reports. That will specify detail all erosion control, sediment control, re-vegetation and urban drainage BMP and submit said items to the City from a qualified professional in their respective field, prior to the permit being issued. The developer is here by notified that the possession of 404 permit does not constitute compliance until all details and BMP have been reviewed by the City.

H. **Utah Department of Transportation (UDOT) Access Permit** – The developer/contractor is responsible for obtaining a UDOT access permit for any work, which will require a connection to a UDOT owned and maintained roadway.

I. **Utah Department of Transportation (UDOT) Encroachment Permit** - The developer/contractor is responsible for obtaining a UDOT encroachment permit for any work, which will impact UDOT, owned property.

J. **Canal Company Discharge Permit** – The discharge of any surface water to an irrigation canal will require that the developer/contractor obtain a storm water discharge permit from that canal company.

K. **Other Permits** - Other permits may also be required by other agencies, which must be applied for and obtained by the developer or his contractor. Certain permits are also required as part of the development conditioning process which must be provided prior to beginning construction of the project. Please refer to the City's 'Development Processing Manual' for additional information.

7.4 INSPECTION

A. **General Excavating and Grading Requirements**

1. Supervision. The land disturbance permit holder shall provide sufficient supervisory control during the grading operations to insure compliance with the

approved plans and with the provisions of this Code. The land disturbance permit holder shall avail himself of geological and/or soils engineering services to implement the supervisory control of the land disturbance permit holder's registered civil engineer. The engineering geologist and/or soils engineer shall be properly qualified, in accordance with the provisions of this chapter, and qualified to perform such services within the City. Periodic reports as required by the City Engineer shall be submitted by the soils engineer and/or engineering geologist.

1. Safety precautions during grading. If, at any stage of work on an excavation or fill, the City Engineer determines by inspection that further work as authorized by an existing land disturbance permit is likely to endanger any property or public way, the City Engineer may require that plans for such affected area be amended to include adequate safety precautions as a condition to allow the work to continue. The City Engineer may cause the work on the affected area to be halted and may require that plans be amended to include adequate safety precautions as a condition to allow the work to continue.

   Safety precautions may include, but shall not be limited to, specifying a flatter exposed slope or construction of additional drainage facilities, berms, terracing, compaction, cribbing, retaining walls or buttress fills, slough walls, desilting basins, check dams, benching, wire mesh and guniting, rock fences, revetments, or diversion walls.

3. Supervised grading. Where necessary, the City Engineer shall require the land disturbance permit holder to employ:

   a. A registered civil engineer to supervise all grading;
   b. A soils engineer to provide either constant or continuous soils inspections: and
   c. An engineering geologist to provide either constant or continuous geological inspections as suit the job.

   The employment of such persons shall not be deemed to render unnecessary inspections described in this chapter, except that on any work requiring the continuous supervision and inspection of a registered civil engineer, the inspections required by this section may be delegated to the registered civil engineer by the City Engineer.

   If the registered civil engineer, soils engineer, or engineering geologist, fulfilling his responsibility pursuant to the provisions of this section, finds that work is not being done in conformance with the provisions of this chapter or the plans and specifications approved by the City Engineer, the registered civil engineer, soils engineer, or engineering geologist shall immediately notify the person in charge of the grading work, and if the nonconformity is not corrected, the City Engineer shall be notified in writing of the nonconformity and of the corrective measures to be taken. Such notice shall be delivered to the office of the City Engineer within twenty-four (24) hours except in the case of mass grading, which is more than 10,000 cubic yards per day, when the time limit shall be eight (8) hours.

If, for any reason, the services of any of the three (3) professional persons are terminated during the progress of the grading work, such professional person and the land disturbance permit holder shall immediately notify the City Engineer in writing. Such termination may result in temporary delays in the grading operations until satisfactory arrangements are made to assure the City Engineer that competent professional supervision is provided. When the services of one or all three (3) of the professionals of record are terminated, the professional whose services have been terminated shall submit to the City Engineer certification of work performed under his supervision, along with deficiencies to be corrected. The new professional shall submit to the City Engineer a letter of certification that the previous professional's design, reports, and recommendations have been reviewed, that all provisions the City Engineer required as conditions of the land disturbance permit will be complied with during the course of the work, and that he shall review the detailed grading plans and thus assume his responsibility as set forth in this chapter for all future grading on the project. The letters shall be referenced to the approved grading plans prepared by the design civil engineer.

The certification shall state that the job was constructed as indicated by the "as built" plan, that the soils engineer and engineering geologist's reports and certifications have been submitted, that they have provided their services in accordance with good practices, and that all drainage provisions and safety features have been incorporated in the grading of the site.

B. **Inspections of Excavations and Fills**

1. Requirements. All construction or work for which a land disturbance permit is required shall be subject to inspections by authorized employees of the City, and certain types of work to be determined by the City Engineer shall have either continuous or constant inspection and supervision by a registered civil engineer, and/or other appropriate consultants, soils engineer, and engineering geologist as a condition of the issuance of the land disturbance permit. Prior to issuing a grading certificate, a final inspection shall be made of all construction or work for which a land disturbance permit has been issued.

2. Exposure of work. Whenever any work on which called inspections are required, as specified in this section, is covered or concealed by additional work without having first been inspected, the City Engineer may require, by written notice, that such work be exposed for examination. The work of exposing and recovering shall not entail expense to the City.

3. Notices. The land disturbance permit holder or his agent shall notify the City Engineer twenty-four (24) hours in advance of the time when the grading operation is ready for each of the following inspections:

   a. Initial inspections. When the land disturbance permit holder is ready to begin work but before any grading or brushing is started;
   b. Toe inspections. After the natural ground is exposed and prepared to receive fill but prior to the placing of any fill. Approval for placing fill shall not be made until all debris and unsuitable material has been removed from the site to an approved location;

c. Sub-drain inspections. Inspections shall be required on all sub-drains after the installation but prior to the placement of any fill;

d. Excavation inspections. After the excavation is started but before the vertical depth of the excavation exceeds ten (10') feet;

e. Fill inspections. After the fill emplacement is started but before the combined vertical height of the lift exceeds ten (10') feet;

f. Drainage device inspections. After the forms, steel reinforcement, and pipe are in place but before any concrete is placed;

g. Rough grading. When all the rough grading has been completed. This inspection may be called for at the completion of the rough grading without the necessity of the City Engineer having previously reviewed and approved applicable reports;

h. Rough grading certification. A conditional interim certificate may be issued to the City Engineer to allow the issuance of building land disturbance permits. This certificate shall in no way exonerate the applicant from completing the grading;

i. Final certification. When all work, including the installation of all drainage structures, other protective devices, the compaction of trench backfill, and planting and slope stabilization, has been completed and the "as built" plan and required reports have been submitted;

j. Other inspections. In addition to the called inspections provided by this section, the City Engineer may make any other inspections of any work to ascertain compliance with the provisions of this chapter and other laws; and

k. Interrupted grading. When the land disturbance permit holder is ready to resume work, but before any grading or brushing is started, the land disturbance permit holder or his agent shall notify the City Engineer twenty-four (24) hours in advance of the time when the grading operation is ready.

4. Certification. The Developer's engineer shall certify to the Building Official, upon the completion of the grading work, that all grading work has been done in compliance with all approved grading plans and reports and that all applicable Building Code regulations shall be administered by the office of the Building Official thereafter.

5. Issuance of certificates. Upon the final inspection when it is found that the work authorized by the land disturbance permit, including the installation of all drainage structures, has been satisfactorily completed in accordance with the requirements of this chapter, a grading certificate covering such work shall be issued to the land disturbance permit holder by the City Engineer.

6. Final reports. Upon the completion of the work, the City Engineer may require the following reports and information:

a. A report from a registered civil engineer certifying that all grading, lot drainage, and drainage facilities have been completed in conformance with the approved plans and the provisions of this chapter and that the graded site will support residential or commercial type structures, whichever is applicable;

b. A soils engineering report including, but not limited to, certification of the soil bearing capacity, summaries of field and laboratory tests, locations of tests, expansive soil classification lot by lot, and slope tests taken in the fills showing the limits of compacted fill on an "as built" grading plan;

c. An engineering geology report by the engineering geologist, based on the final contour map, including specific approval of the grading as affected by geological factors. Where necessary, a revised geologic map, cross sections, and any recommendations necessary shall be included; and

d. When "as built" grading plans are required, as determined by the City Engineer, such plans shall be signed by the supervising civil engineer, the soils engineer, and the engineering geologist, when applicable, for their portions of the work.

C. **Additional Inspections or Testing** - The City Engineer may require additional inspection and testing by an approved testing when deemed necessary. The testing agency's responsibility may include, but need not be limited to, certification concerning the inspection of cleared areas and benches to receive fill, and determination of the compaction density of fills. Any such additional testing or inspections shall be at the land disturbance permit holder's expense.

D. **Final Inspection** - The developer's engineer shall inspect and certify that the site is ready for final inspection and shall request a final inspection of the City Engineer in writing.

The City Engineer is not give final approval until all work has been completed in accordance with the final approved plans and specifications, including, but not limited to, installation of all drainage facilities and their protection devices, all required re-vegetation, all required erosion and sediment control measures, and an approved post-construction maintenance schedule is established. The acceptability of re-vegetation stabilization will be determined by the City using the criteria set forth in the Land Disturbance Design and Construction Standards.

E. **Inspection of Individual Lots** - The construction of buildings and other structures on individual lots shall not begin until after all improvements required as part of the final plat map or site plan have been completed.

As part of the subdivision improvements' inspections, the Engineering Department will provide inspection for all 'subdivision level' related improvements. This will include all improvements within the City's dedicated right-of-way and receipt of certification that the Grading and Drainage Plan and grading and drainage drawings have been complied with (from the design engineer) and the original erosion control measures are in place as required.

Once the subdivision level improvements are in placed and approved, the Building Division will then become responsible for the project on a lot-by-lot basis and is responsible for the 'Lot Level' designs and inspections. This would include receiving certification from the design engineer that the Grading and Drainage Plan, grading and drainage drawings are still being complied with, that the requirements of the lot's 'site plan' are being complied with which would include such items as locations of driveways, their grades, setbacks of the house, retaining walls, etc.

7.5 TRAFFIC REGULATION

A. **General** - The Contractor shall submit a traffic control plan to the City for review and approval. The traffic control plan shall include the times the work shall be ongoing, streets affected, the proposed plan for dealing with traffic as well as a schedule for work to be performed. This work shall be done in accordance with the following technical specification:

1. Section 02010 – Traffic Regulation

7.6 CLEARING AND GRUBBING

A. **General** - Clearing and grubbing which consists of removal of objectionable material from the right-of-way and project shall be done with caution such that existing wastewater improvements, adjacent property and trees and shrubbery that are not to be removed shall be protected from injury or damage. In areas of excessive deep organic layer the clearing and grubbing shall be defined as a depth not to exceed 12 inches. The sequence of construction will be followed by the contractor and have the sediment and dust control BMP in place as the clearing and grubbing proceeds. At no time will the contractor leave the site at the end of the day without providing for sediment and dust controls.

Within public utility easements or rights-of-way, trees, shrubs, fences and all other improvements that have to be removed to permit construction and which are intended for replacement, shall be replaced in kind or size (excluding native trees under 2-inch diameter or native brush) or with approved substitutes unless permission to exclude such replacement is obtained from the owner/agency or granted by the Engineering Department. Replacement trees shall have a minimum diameter caliber, above graft, as recommended by the American Association of Nurserymen, but shall be larger if so required. This work shall be done in accordance with the following technical specification:

1. Section 02112 – Clearing, Grubbing and Stripping

B. **Removal and Disposal of Material** – The contractor shall be responsible for leaving the site in a neat and finished appearance, free from debris and/or inflammable material. Debris to be legally transported to a legal disclosed landfill. Under no condition will debris be buried, including vegetation.

7.7 UTILITIES, EXISTING FACILITIES AND CONCRETE REMOVAL

A. **Abandonment** - Refer to Section 8.0 regarding abandonment of roadways and/or structures.

B. **Utilities and Existing Facilities** - The existing utilities and/or facilities shown on the drawings or the location of which is made known to the contractor prior to excavation, by contacting Blue Stakes 2 working days or as required by the involved utility companies, shall be protected from damage during the excavation and backfilling of trenches and, if damaged, shall be repaired by and at the contractor's expense. Any existing utility or facility not shown on the drawings or the location of which is not shown to the contractor in sufficient time to avoid damage, if inadvertently damaged during excavation, shall be

repaired by the contractor; and adjustment in payment, if any, is subject to negotiation between the contractor and the developer without any City liability, unless it is a City sponsored project.

Whether expressly indicated on the drawings or not, all contractors shall call Blue Stakes prior to any clearing, grubbing, or excavating. Failure to do so shall not relieve the contractor of any liability associated with disturbance/ breakage of existing utilities. This work shall be done in accordance with the following technical specification:

1. Section 02223 – Protecting Existing Underground Utilities

In case it shall be necessary to remove any such utilities, facilities or any portions thereof, the contractor shall notify the Engineering Department and the owner of the structure. The contractor shall not interfere with said utility and/or facility structures until disposition of the obstruction to the work has been determined and/or notice to relocate or remove has been given by the Engineering Department or authorized agent of the owner of the utility and/or facility so affected.

The fact that any underground utility and/or facility is not shown on plans shall not relieve the contractor's responsibility to comply with these standards. It shall be the contractor's responsibility to ascertain prior to commencing work the existence of any underground utilities or facilities that may be subject to damage by reason of operations performed by the contractor.

C. **Concrete, Masonry or Mortared Construction Removal** - At locations shown on plans, portions of existing concrete pavement, curbs, gutters, sidewalks, foundations and other concrete or mortared structures shall be removed to the lines and elevations specified. Concrete structures or objects not shown or noted on the plans shall be removed where necessary and disposed of by the contractor.

Concrete removal operations in connection with the reconstruction of existing structures shall be performed without damage to any portion of the structure that is to remain in place. If damage occurs, the contractor shall repair any such damage at his own expense, to the satisfaction of the Engineering Department. Repair/replacement of any sidewalks, curbs and/or gutters shall be to the satisfaction of the Engineering Department, as appropriate. Where existing reinforcement is to be incorporated in new work, such reinforcement shall be protected from damage and shall be thoroughly cleaned of all adhering material before being embedded in new concrete.

7.8 EXCAVATION AND TRENCHING

A. **General** - Trench excavation shall consist of all excavation involved in the grading and construction of water lines, and other utilities and facilities as shown on plans. The contractor shall perform all excavation of every description and of whatever substances encountered, to depths indicated on the drawings or otherwise specified or required. During excavation, material suitable for backfilling shall be piled in an orderly manner a sufficient distance from the banks of the trench to avoid overloading and to prevent slides or cave-ins. The material piles shall also not obstruct existing sidewalks, roadways, or driveways unless approved in writing by the Engineering Department. All excavated materials not required or unsuitable for backfill shall be removed. Such grading shall be done as may be necessary to prevent surface water from flowing into trenches or other

excavations, and any water from any source accumulating therein shall be removed by pumping or by other approved methods. Such sheeting and shoring shall be done as may be necessary for the protection of the work and for the safety of personnel.

Unless otherwise indicated, excavation shall be by open cut except that short sections of a trench may be tunneled if, in the opinion of the Engineering Department, the pipe or duct can be safely and properly installed and backfill can be properly tamped in such tunnel sections. If blasting is necessary, the contractor shall notify the City of his blasting schedule and procedures and obtain a blasting permit, and shall observe all reasonable precautions in protecting life and property. This work shall be done in accordance with the following technical specification:

1. Section 02200 - Earthwork
2. Section 02201 – Earthwork (For Roads and Highways Only)
3. Section 02211 - Rough Grading

B. **Excavation** - Excavation for water lines shall be made only after pipe and other necessary materials are delivered on the work site. After such delivery, trench excavation shall proceed as rapidly as possible, and the pipe installed and the trench backfilled without undue delay.

C. **Shoring** - All shoring for open excavations shall conform to the State of Utah, Department of Industrial Relations, and Division of Industrial Safety "Construction Safety orders (O.S.H.A)." The contractor shall be responsible for adequately shored and braced excavations so that the earth will not slide, move or settle, and so that all-existing improvements of any kind will be fully protected from damage.

No shoring once installed shall be removed until the trench has been approved for backfill operations. Removal of shoring shall only be accomplished during backfill operations and in such a manner as to prevent any movement of the ground or damage to the pipe or other structures.

The contractor shall obtain and pay for all permits for any excavations over 5 feet (1.5m) in depth into which a person is required to descend or any excavation less than 5 feet (1.5m) in depth in soils where hazardous ground movement may be expected and into which a person is required to descend.

7.9 BACKFILL AND COMPACTION

A. **General** - There are several distinct zones to be considered in the backfilling procedure as follows:

1. Pipe Zone. This area is from the trench bottom to 12 inches (300 mm) above the pipe. This zone is to be backfilled under the strict jurisdiction of the Engineering Department.

2. Above pipe zone but below pavement sub-grade plus the zone including the sub-grade and pavement Backfill and compaction in existing streets and in the area above the pipe zone shall be in full accordance with the City excavation permit issued for the specific work, and with the City land development specifications. In both cases, the filling of trenches shall be subject to approval by the City or

Engineering inspector who shall have full authority to order compaction tests to demonstrate the actual backfill density.

7.10 CONSTRUCTION WATER

A. **General** - The developer/contractor shall not take unmetered water from the City's or any other culinary water system. Instead, he or she should sign up at the Public Works Department for one or more construction meters after receipt of a deposit amount. The developer/contractor is not to move the construction meters. Charges for construction water are covered by City Council Resolution. The developer/contractor is put on notice that unpaid invoices will result in removal of the construction meter. This work shall be done in accordance with the following technical specification:

1. Section 02161 - Care of Water

7.11 SUBGRAGE PREPARATION AND PLACEMENT OF BASE MATERIALS

A. **General** – This work shall provide for the preparation of natural, filled, or excavated roadbed material prior to the placement of subbase or base material, pavement, curbs and gutters, driveways, sidewalks, or other roadway structures.

B. **Subgrade Preparation** – This work shall be done in accordance with the following technical specification:

1. Section 02227 - Sand-Cement Slurry
2. Section 02280 - Soil Treatment
3. Section 02514 - Soil Cement Base

C. **Untreated Base** – This work provides for untreated base for pavement, curb, gutter and similar types of improvements that shall be constructed according to their technical specification sections.

7.12 CONCRETE AND MASONRY CONSTRUCTION

A. **General** – This work provides for construction of concrete structures, curbs & gutter, sidewalks, cross gutters and driveways connected to grading, erosion, revegetation and sedimentation control projects. This work shall be done in accordance with the following technical specification:

1. Section 03100 - Concrete Formwork
2. Section 03102 – General Concrete Construction
3. Section 03200 - Concrete Reinforcement Steel
4. Section 03300 - Cast-in-Place Concrete
5. Section 03304 – Minor Concrete

B. **Concrete Structures** – Concrete bridges, culverts, catch basins, retaining walls, abutments, piers, footings foundations, and similar structures shall be constructed in conformity with the plans and specifications. Retaining walls are to be inspected by the Developer's engineer with reports being submitted to the City for review.

C. **Concrete Curbs & Gutters, Sidewalks, Cross Gutters, and Driveways** – Concrete curbs, walks, gutters cross gutters, alley intersections, access ramps, and driveways shall be constructed of Portland cement concrete of the class and other requirements prescribed in the plans and specifications. The finish coat to be applied to curbs shall consist of Class "B" mortar.

7.13 LANDSCAPE AND IRRIGATION SYSTEMS

A. **General** – This section shall govern the preparation, planting, and irrigation system construction for landscape areas required by the City.

Existing utilities and improvements not designated for removal shall be protected in place. Unless otherwise provided, walls, curbs, planter boxes, walks, irrigation systems, and similar improvements required by the City shall be constructed following rough grading and before landscaping.

B. **Testing** - All work on the irrigation system, including hydrostatic and coverage tests, preliminary operational tests of the automatic control system, and the backfill and densification of trenches, and other excavations shall be performed after topsoil work and before planting. This work shall be done in accordance with the following technical specification:

1. Section 02811 - Landscape Irrigation System

SECTION 8.0

ABANDONMENT

8.1 GENERAL

The developer's engineer shall indicate all existing roadways, water or storm drain lines or structures, which are to be abandoned, on the drawings. In general, abandoned lines, which are in service, will be replaced with a parallel line of equal or larger size, and the engineer shall demonstrate in any case that the abandonment does not adversely affect the operation of the system.

All abandonment of property and abandonment and construction of underground pipelines shall be discussed with the Engineering Department and approved prior to any such work.

8.2 UNDERGROUND UTILITY LINES

Underground utility lines to be abandoned shall be entirely filled by pumping concrete into them. The pump mix shall be a mixture sufficiently workable for the purpose intended and shall be a concrete mix of 200-psi minimum. The engineer shall show on the drawings the approximate number of cubic yards of concrete, which will be required for any particular reach.

8.3 STRUCTURES

Structures associated with lines to be abandoned shall be removed by the contractor/developer and given to the City, if salvageable.

8.4 EASEMENTS OR RIGHT-OF-WAY

All easement and right-of-way abandonments shall be provided for as part of the development processing, not during construction. If it is determined that easements or property must be abandoned during construction, the project will be put on hold until the property issues are resolved to the satisfaction of the City, and/or the Salt Lake County Recorder's office.

SECTION 9.0

TESTING

9.1 GENERAL

This section applies to grading and soils materials testing, erosion control materials and storm drain system materials testing, concrete and other miscellaneous materials tested associated with this standard. The references made here are for general information only and the individual construction specifications need to be referenced for additional details on testing for that specific item. The testing of culinary water, storm drainage facilities, wastewater, parks and trails, and road and bridge facilities are addressed in other design and construction standards.

9.2 CONCRETE TESTING

A. The following references apply to concrete related items including concrete mix design, testing of aggregates and cement, reinforcing steel, concrete unit masonry, and others:

ACI 214-77	Recommended Practice for Evaluation of Strength Test Results of Concrete.
ACI 301-79	Specifications for Structural Concrete for Buildings.
ACI 304	Specifications for Site Mixed Concrete
ACI 308	Specifications for Curing Concrete
ACI 315-80	Details and Detailing of Concrete Reinforcement.
ACI 318-77	Building Code Requirements for Reinforced Concrete. WRI Manual of Standard Practice for Welded Wire Fabric
ACI 347-78	Recommended Practice for Concrete Formwork.
ASTM A82-79	Specification for Steel Wire, Plain, for Concrete Reinforcement.
ASTM A185-79	Specification for Welded Steel Wire Fabric for Concrete Reinforcement.
ASTM A478	Specification for Precast Reinforced Concrete Manhole Sections
ASTM A615-82	Specification for Deformed and Plain Billet-Steel Bards for Concrete Reinforcement
ASTM A775	Test Methods for Epoxy Coatings
ASTM C31-84	Methods of Making and Curing Concrete Test Specimens in the Field.
ASTM C33-84	Specification for Concrete Aggregates.
ASTM C34	Testing of Concrete Specimens
ASTM C39-83b	Test Method for Compressive Strength of Cylindrical Concret Specimens.
ASTM C76	Specification for Reinforced Concrete Culvert Storm Drain and Sewer Pipe
ASTM C90	Specifications for Concrete Masonry Units
ASTM C94-83	Specification for Ready-Mixed Concrete.
ASTM C114-83b	Method for Chemical Analysis of Hydraulic Cement.
ASTM C127	Method of Sieve Analysis of Course Aggregate
ASTM C136-84a	Method for Sieve Analysis of Fine and Coarse Aggregate.
ASTM C143-78	Test Method for Slump of Portland Cement Concrete.
ASTM C144	Specifications for Masonry Mortar
ASTM C150-84	Specification for Portland Cement.

ASTM C156-80a	Test Method for Water Retention by Concrete Curing Materials.
ASTM C157-80	Test Method for Length Change of hardened Cement Mortar and Concrete.
ASTM C192-81	Method of Making and Curing Concrete Test Specimens in the Laboratory.
ASTM C207	Specifications for Hydrated Lime
ASTM C231	Specifications for Concrete Mix Air Content
ASTM C260-77	Specification for Air-Entraining Admixtures for Concrete.
ASTM C309	Specifications for Concrete Curing Compound
ASTM C311-85	Method for Sampling and Testing Fly Ash or Natural Pozzolans for Use as a Mineral Admixture in Portland Cement Concrete.
ASTM C404	Specifications for Concrete Unit Masonry Aggregate
ASTM C443	Specifications for Rubber Gaskets
ASTM C478	Pre-cast Concrete Manholes
ASTM C494-82	Specification for Chemical Admixtures for Concrete.
ASTM C578	Specifications for Rigid Insulation for Concrete
ASTM C615	Specifications for Reinforcing Steel
ASTM C618-85	Specification for Fly Ash and Raw or Calcined Natural Pozzolan for Use as a Mineral Admixture in Portland Cement Concrete.
ASTM D173	Specifications for Saturated Cotton Fabric
ASTM D1751-83	Specification for Preformed Expansion Joint Fillers for Concrete Paving and Structural Construction (Non-extruding and Resilient Bituminous Types).
ASTM D1752	Specifications for Expansion Joint Material
ASTM E119-83	Method for Fire Tests of Building Construction and Materials.
AWS Dl.4-79	Structural Welding Code - Reinforcing Steel.
PS 1-74	U.S. Product Standard for Concrete Forms, Class I.

9.3 SOILS TESTING

A. The following references apply to soils, excavation, grading and recompaction efforts related items. They are as follows:

ASTM D 422-63(1972)	Method for Particle-Size Analysis of Soils.
ASTM D 698-78	Test Methods for Moisture-Density Relations of Soils and Soil Aggregate Mixtures, Using 5.5lb (2.49kg) Rammer and 12-in (304.8 mm) Drop.
ASTM D 1140-54(1971)	Test Method for Amount of Material in Soils Finer than the No. 200 (75 mm) Sieve.
ASTM D 1556-82	Test Method for Density of Soil in Place by the Sand-Cone Method.
ASTM D 1557-78	Test Methods for Moisture-Density Relations of Soils and Soils-Aggregate Mixtures using 10-lb. (4.54 kg.) Rammer and 18-in. (457mm.) Drop.
ASTM D 1663-84	Test Method for Compressive Strength of Molded Soil-Cement Cylinders.
ASTM D 2419-74(1979)	Test Method for Sand Equivalent Value of Soils and Fine Aggregate.
ASTM D 2487-83	Classification of Soils for Engineering Purposes.
ASTM D 2901-82	Test Method of Cement Content of Freshly-mixed Soil Cement.

ASTM D 2922-81	Test Methods for Density of Soil and Soil-Aggregate in Place by Nuclear Methods (Shallow Depth).
ASTM D 4318-84	Test Method for Liquid Limit, Plastic Limit, and Plasticity Index of Soils.

9.4 STORM DRAINAGE SYSTEM TESTING

A. The following references apply to storm drainage system related items including piping, trench backfill and compaction and storm drainage appurtenances.

AASHTO M 252	Corrugated Polyethylene Drainage Tubing
ASTM C76 (1989)	Reinforced Concrete Culvert, Storm Drain, and Sewer Pipe
ASTM D422	Particle-Size Analysis of Soils
ASTM D698	Test Method of Moisture-Density Relations of Soils and Soil-Aggregate Mixtures Using 5.5 lb (2.5-kg) Rammer and 12-inch (305mm) Drop
ASTM D2321	Recommended Practice for Installation of Corrugated Polyethylene Pipe
ASTM D2487	Classification of Soils for Engineering Purposes
ASTM D2922	Density of Soil and Soil-Aggregate in Place by Nuclear Methods (Shallow Depth)
ASTM D3017	Water Content of Soil and Rock in Place by Nuclear Methods (Shallow Depth)
ASTM D	3034 Standard Specifications for Sewer Pipe and Fittings

9.4 MISCELLANEOUS TESTING

A. The following references apply to miscellaneous item including PVC piping, testing methods for plastic sheeting and film, gaskets, etc.

AWWA M 23	Manual of Water Supply Practices – PVC Pipe – Design and Installation
ASTM D638	Standard Test Method for Tensile Properties of Plastics
ASTM D746	Standard Test Method for Brittleness Temperature of Plastics and Elastomers By Impact
ASTM D792	Standard Test Method for Specific Gravity and Density of Plastics by Displacement
ASTM D1004	Test Method for Initial Tear Resistance of Plastic Film and Sheeting
ASTM D1204	Test Method for Linear Dimensional Changes of Nonrigid Thermoplastic Sheeting or Film at Elevated Temperature
ASTM D1238	Standard Test Method for Flow Rates of Thermoplastics by Extrusion Plastomer
ASTM D1505	Test Method for Density of Plastic by the Density-Gradient Technique
ASTM D1593	Specification for Nonrigid Vinyl Chloride Plastic Sheeting
ASTM D1603	Test Method for Carbon Black in Olefin Plastics
ASTM D1693	Test Method for Environmental Stress-Cracking of Ethylene Plastics
ASTM D2564-80	Test Method for PVC Solvent Cement

ASTM D3015	Standard Practice for Microscopical Examination of Pigment Dispersion in Plastic Compounds
ASTM D4437	Practice for Determining Integrity of Field Seams Using Joining Flexible Polymeric Sheet Geomembranes

Federal Specification

SS-S-00210	Plastic Sealing Gasket

SECTION 10.0

WORK AREA CLEAN-UP

10.1 FINAL PROJECT CLEAN-UP

During construction the Contractor must take care to not track dirt, mud or other debris from the construction site onto adjacent City streets or private property. Vehicles must be washed down prior to leaving the construction site, if mud is present, an/or the Contractor must employ a sweeper to clean the streets daily. In all cases the contractors are required to adhere to the Inspector requirements. The details, penalties, etc. are contained in the City's Municipal Code.

Once all roadway work has been completed and can be field accepted, the Contractor shall clean the streets, curbs, gutters and nearby affected areas to the satisfaction of the City. All structures including fire hydrants shall be properly painted, where required, and free from dirt, concrete or other spattered materials. Also, the work site will be cleaned of construction debris by the contractor. All private improvements damaged during construction shall be restored to at least the original condition of said improvements including but not limited to trees, shrubs, curbs, gutters, sidewalks, fences, grass, etc. Filled excavations in private property shall be neatly finished in a manner to facilitate natural drainage and eliminate hazards to persons or property. Also, all requirements of the Engineering Department, Community Development Department, and other requirements shall be met. The project shall be left in a final condition that brings no discredit to the City.

APPENDIX A
STANDARD DRAWINGS

TABLE OF CONTENTS

STAND. DWG. NO.	DICRIPTION
	General
1005	Abbreviations and Symbols
1010	Abbreviations and Symbols (Roadways)
1015	South Jordan City Map
	Channel Erosion Protection
5000	Energy Dissipator
5005	Erosion Blankets & Turf Reinforcement Mats- Channel Installation
5010	Grass- Lined Channel- Typical Cross Sections
5015	Grass- Lined Channel- Typical Installation
5020	Log Check Dam
5030	Rip Rap Protection
5035	Rock Check Dam
5040	Rock Lined Channel
5050	Temporary Semi- Pervious Straw Bale Sediment Barrier
5055	Temporary Straw Bale Check Dam
5060	Temporary Straw Bale Dike
5065	Temporary Diversion Dike
	Miscellaneous
5100	Slit Fence
5105	Temporary Gravel Construction Entrance/Exit
5110	Typical Sediment Basin
	Slope Erosion Protection
5200	Brush Layering
5205	Cellular Confinement System for Slope Stabilization
5210	Erosion Blankets & Turf Reinforcement Mats Slope Installation
5215	Grooved or Serrated Slope
5220	Live Staking
5225	Overside drain
5230	Rolling Dip and Waterbar
5235	Slope Drain
5240	Stepped or Terraced Slope
5245	Straw Anchoring
5250	Biolog Rolls
5255	Surface Roughening
5260	Slope Wattle (Live Fascine)

	<u>Storm Drain Sediment Protection</u>
5300	Block and Gravel Drop Inlet Sediment Barrier
5305	Continuous Berm
5315	Curb Inlet Sediment Barrier (Block & Gravel)
5320	Curb Inlet Sediment Barrier (SandBags)
5325	Silt Fence Drop Inlet Sediment Barrier
5330	Straw Bale/ Gravel Drop Inlet Sediment Barrier
	<u>Streambank Erosion Protection</u>
5400	Coir Roll/ Coir Mats
5405	Gabions

SYMBOLS	DEFINITIONS
	CENTER LINE
15+00	CONSTRUCTION CENTER LINE
	PROPERTY OR R/W LINE
	EASEMENT LINE
	MONUMENT LINE
X—X	FENCE
4250	CONTOUR LINE (FG)
4250.0	CONTOUR ELEVATION (FG)
	BANK SLOPES
SD	STORM DRAIN LINE
CW	CULINARY WATER LINE
SW	SECONDARY WATER LINE
G	GAS LINE
T	TELEPHONE CABLE
E	ELECTRIC CABLE
SS	SANITARY SEWER LINE
	ASPHALT PAVING
	FIRE HYDRANT
	WATER VALVE
WM	WATER METER
MH	MANHOLE
CB	CATCH BASIN
COB	CLEAN OUT BOX
	POLE & ANCHOR
	STREET LIGHT
	UNDISTURBED EARTH
	STRUCTURE

SYMBOLS	DEFINITIONS
	CURB & GUTTER
	SIDEWALK
	RAILROAD TRACKS
	GUARD RAIL
	OPEN DITCH, CANAL
	CULVERT
	SECTION CORNER
	SOIL BORING
	MONUMENT
BM NO. 46 ELEV. 4256.50	BENCH MARK
	SIGN
PP	POWER POLE
TP	TELEPHONE POLE
	DECIDUOUS TREE
	CONIFEROUS TREE
	P.I.
	P.C. OR P.T.

	PROFILE
	GROUND PROFILE
ROUND ARCH BOX	CULVERT
	P.V.I.
	P.V.C. OR P.V.T.
	GROUNDWATER ELEVATION

City of South Jordan, Utah

SOUTH JORDAN

ABBREVIATIONS AND SYMBOLS

PLAN 1005

ABBREVIATIONS

C.I.P. = CAST IRON PIPE
D.I.P. = DUCTILE IRON PIPE
PVC = POLYVINYL CHLORIDE
MJ = MECHANICAL JOINT
T.J. = TYTON JOINT
O.B. = OPEN BELL
L.B. = LARGE BELL
WOV = WASH OUT VALVE
VAL. = VALVE
HYD. = HYDRANT
REG. = REGULATOR
BD. = BEND
EXT. = EXTEND
RED. = REDUCER
FLG. = FLANGED
ASSY. = ASSEMBLY
M.W. = MANWAY
MH = MANHOLE
SPIG. = SPIGOT
ADPT. = ADAPTOR
TBC. = TOP BACK OF CURB
F.C. = FACE OF CURB
P.C.C.P. = PRE STRESSED CONCRETE CYLINDER PIPE
C.M.P. CAS. = CORRUGATED METAL PIPE CASING
A.A.V.V. = AUTOMATIC AIR RELEASE VALVE
A.C.A.R.V. = AUTOMATIC COMBINATION AIR RELEASE VALVE
ASPH. = ASPHALT
A.C. = ASPHALTIC CONCRETE
CONC. = CONCRETE
GALV. = GALVINIZED IRON
COP. = COPPER
PRV. = PRESSURE REDUCING VALVE
GV. = GATE VALVE
BFV. = BUTTERFLY VALVE
WOV. = WASH OUT VALVE

SYMBOLS DEFINITIONS

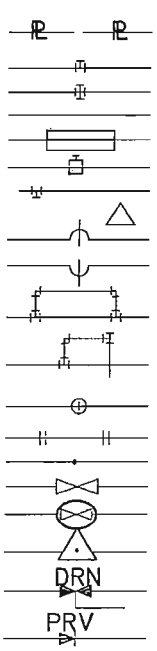

PROPERTY LINES (100' MAP, DESIGN DRAWINGS)
WATER MAIN TEE
WATER MAIN CROSS
REDUCER
REGULATOR
TAPPING SLEEVE AND VALVE
PLUG AND CLAMP
CONCRETE THRUST BLOCK
PIPE OVER
PIPE UNDER
BYPASS
RUN-AROUND
CIRCLED VALVE (SYSTEM NORMALLY CLOSED)
OFFSET OR VERTICAL BENDS
WASH OUT VALVE
GATE VALVE
BUTTERFLY VALVE
AIR RELEASE VALVES
MANUAL DRAIN VALVE
PRESSURE REDUCING VALVE

City of South Jordan, Utah

SOUTH JORDAN	ABBREVIATIONS AND SYMBOLS ROADWAYS	PLAN 1010

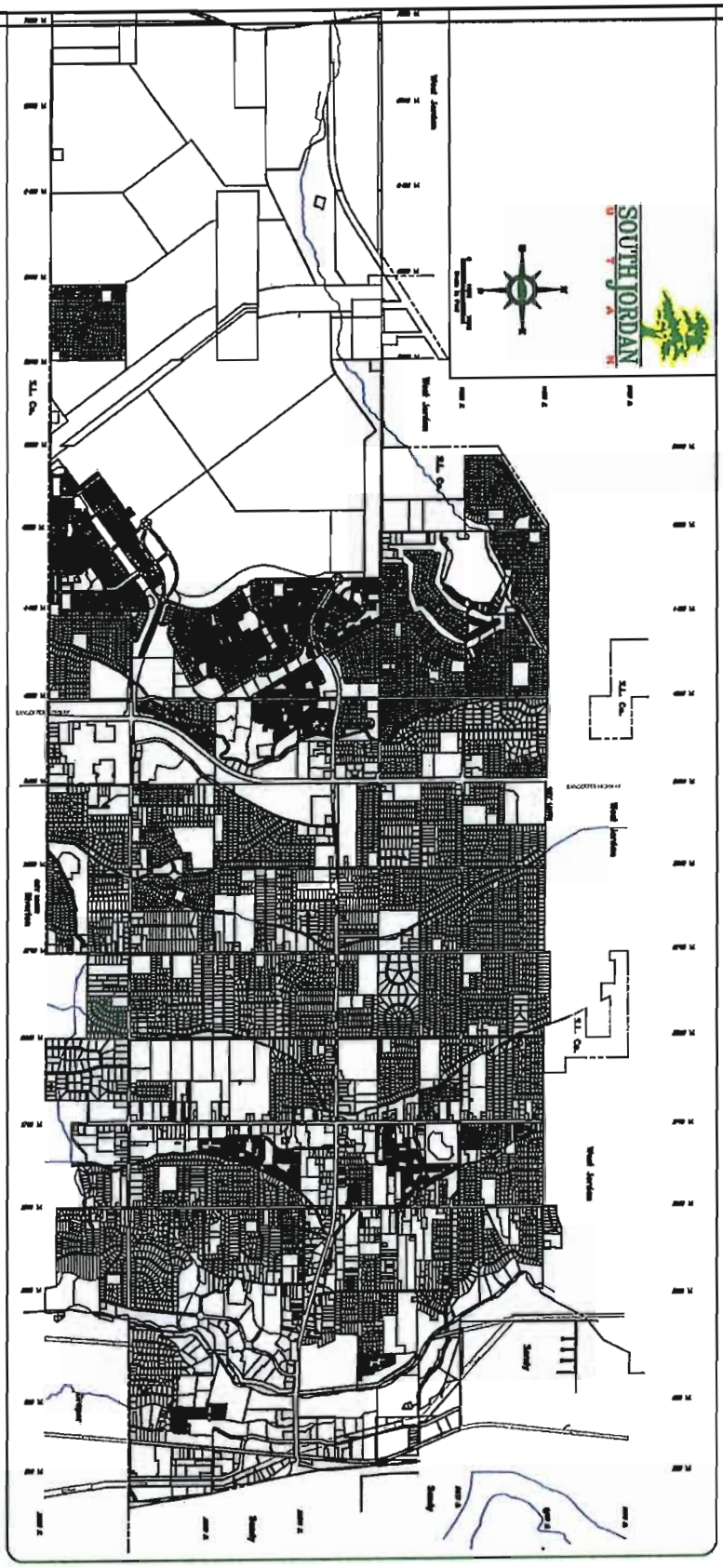

City of South Jordan, Utah

SOUTH JORDAN	SOUTH JORDAN CITY MAP	PLAN 1015

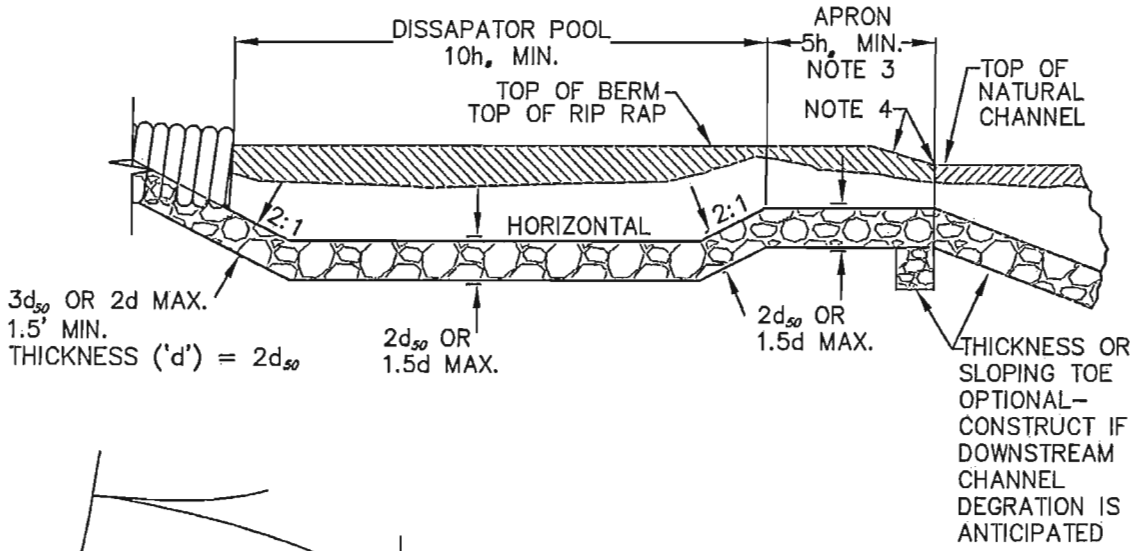

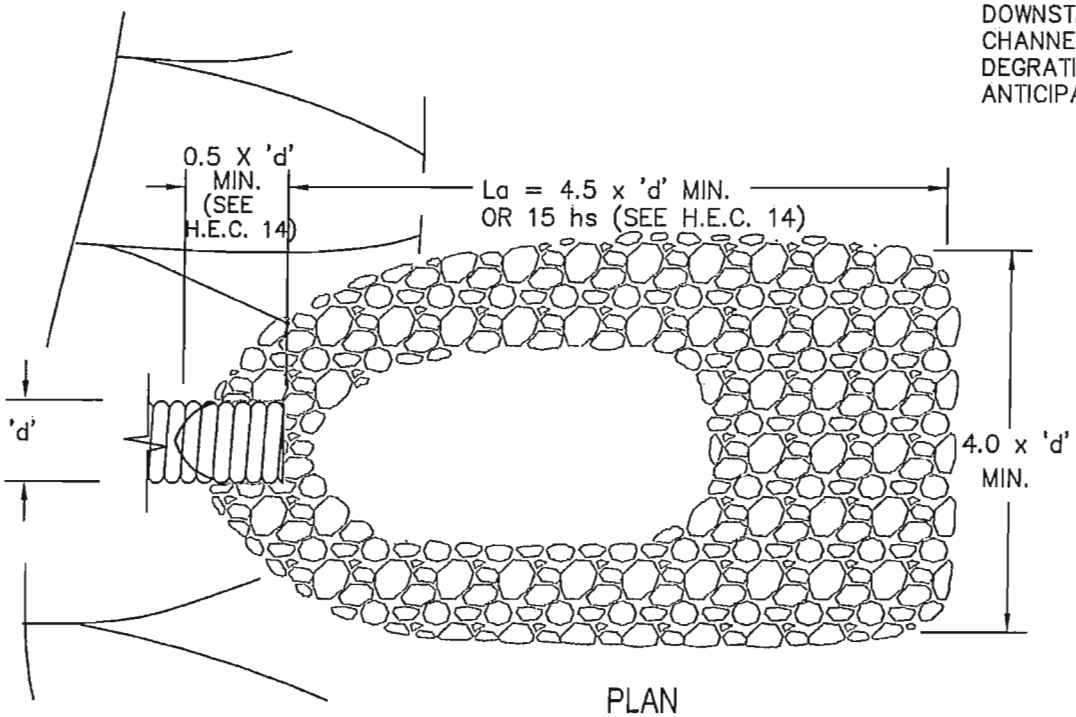

PLAN

NOTES:

1. TO BE DESIGNED PER H.E.C. 14
2. ROCK SIZE TO BE DESIGNED PER H.E.C. 11
3. IF EXIT VELOCITY OF BASIN IS SPECIFIED. EXTEND BASIN AS REQUIRED TO OBTAIN SUFFICIENT CROSS–SECTIONAL AREA.
4. WARP BASIN TO CONFORM TO NATURAL STREAM CHANNEL. TOP OF RIPRAP IN FLOOR OF BASIN SHOULD BE AT THE SAME ELEVATION OR LOWER THAN NATURAL CHANNEL BOTTOM.
5. PLACE RIP–RAP BEFORE OR IN CONJUNCTION WITH THE INSTALLATION OF THE STRUCTURE SO THAT IT IS IN PLACE BEFORE THE FIRST RUNOF EVENT. (AS PER PAGE 2–44)

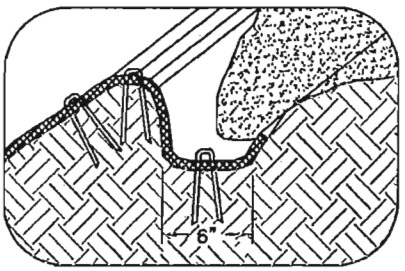

LONGITUDINAL ANCHOR TRENCH

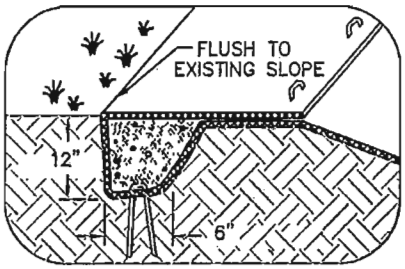

TERMINAL SLOPE AND CHANNEL ANCHOR TRENCH

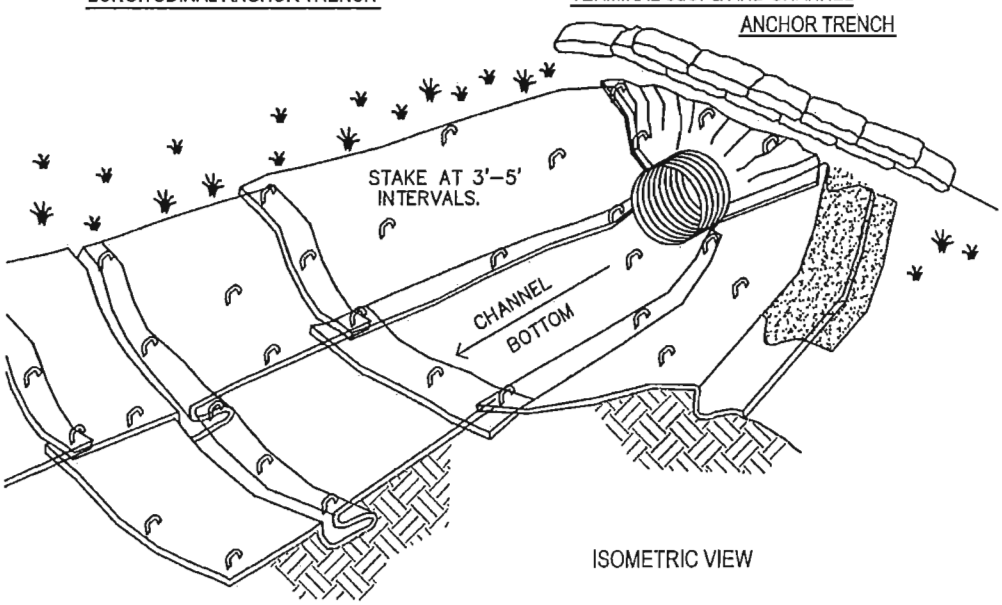

ISOMETRIC VIEW

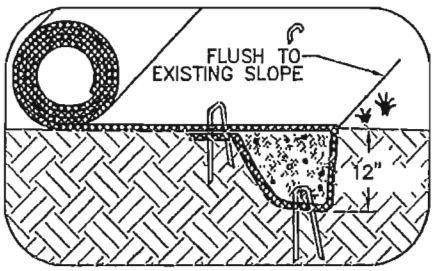

INITIAL CHANNEL ANCHOR TRENCH

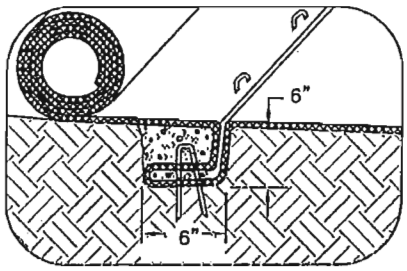

INTERMITTENT CHECK SLOT

NOTES:

1. CHECK SLOTS TO BE CONSTRUCTED PER MANUFACTURERS SPECIFICATIONS.
2. STAKING OR STAPLING LAYOUT PER MANUFACTURERS SPECIFICATIONS.

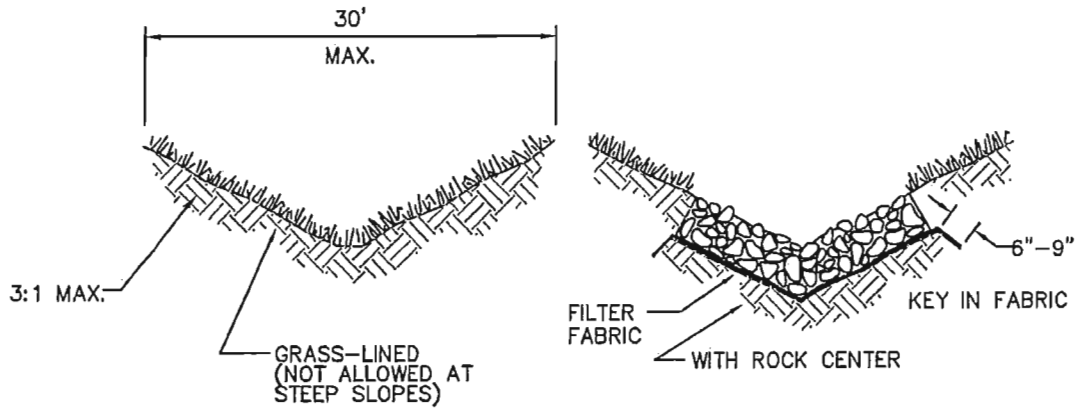

TYPICAL V-SHAPED CHANNEL
CROSS-SECTION

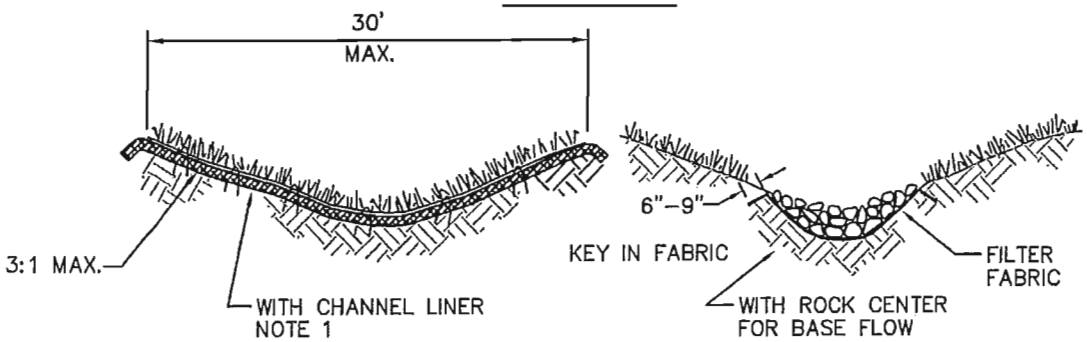

TYPICAL PARABOLIC CHANNEL
CROSS-SECTION

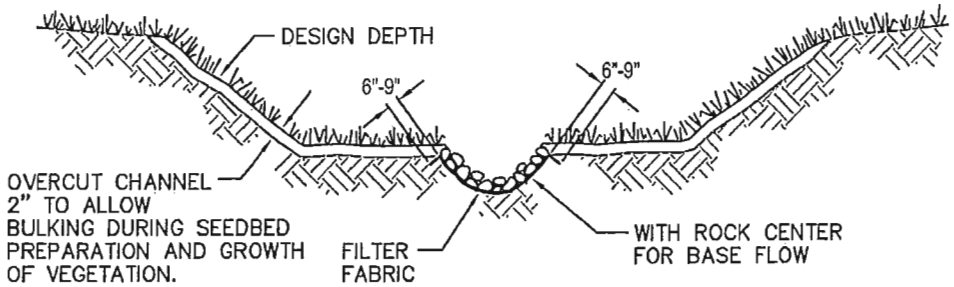

TYPICAL TRAPEZOIDAL CHANNEL
CROSS-SECTION

NOTES:

1. TO BE DESIGNED AS PER H.E.C. 15–FLEXIBLE CHANNEL
2. FABRIC THICKNESS 20–60 MILS.
3. FABRIC GRAB STRENGTH 90–120 LBS
4. FILTER FABRIC TO CONFORM TO ASTM D–1682 OR ASTM D–177

City of South Jordan, Utah

SOUTH JORDAN	GRASS-LINED CHANNEL TYPICAL CROSS SECTIONS	PLAN 5010

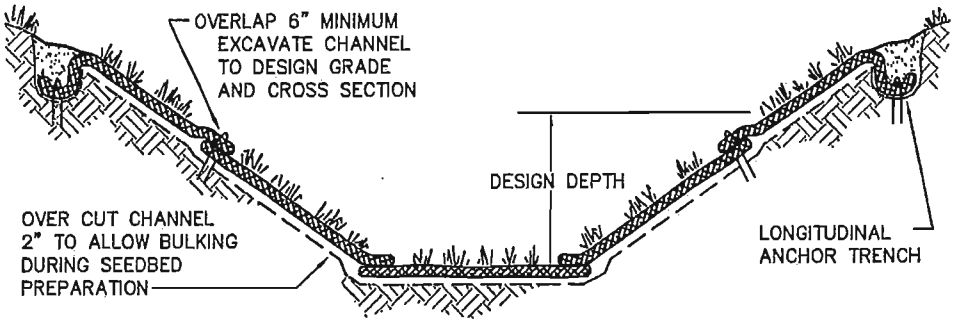

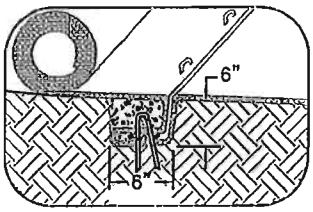

TYPICAL INSTALLATION
WITH EROSION CONTROL
BLANKETS OR TURF
REINFORCEMENT MATS

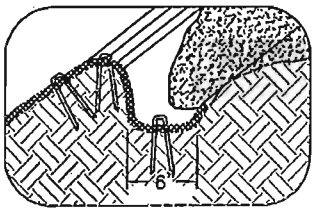

INTERMITTENT CHECK SLOT

LONGITUDINAL ANCHOR TRENCH

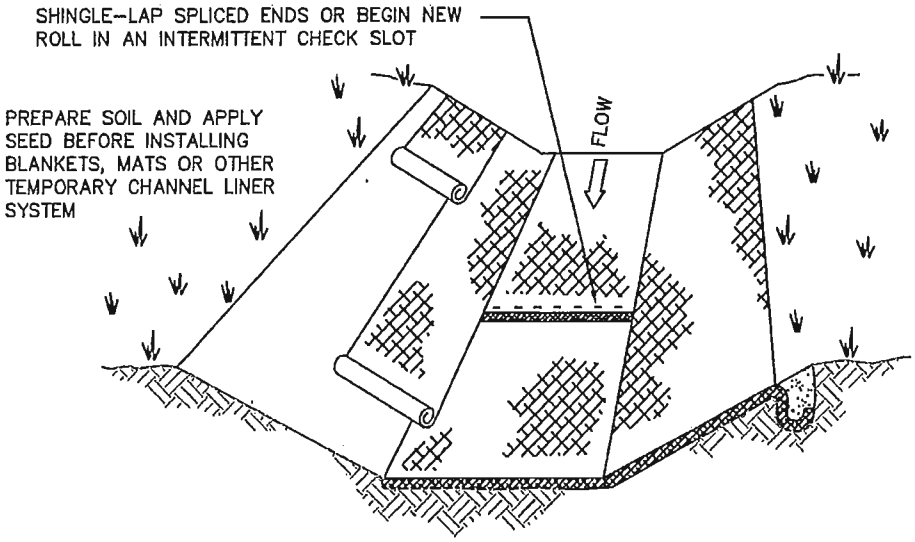

NOT TO SCALE

NOTES:
1. TO BE DESIGNED AS PER H.E.C. 15

City of South Jordan, Utah

SOUTH JORDAN	GRASS-LINED CHANNEL TYPICAL INSTALLATION	PLAN 5015

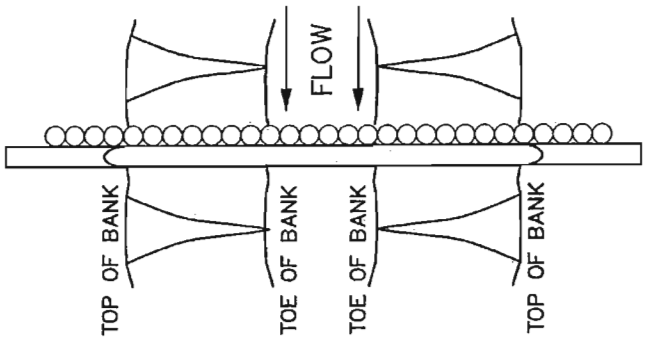

PLAN VIEW

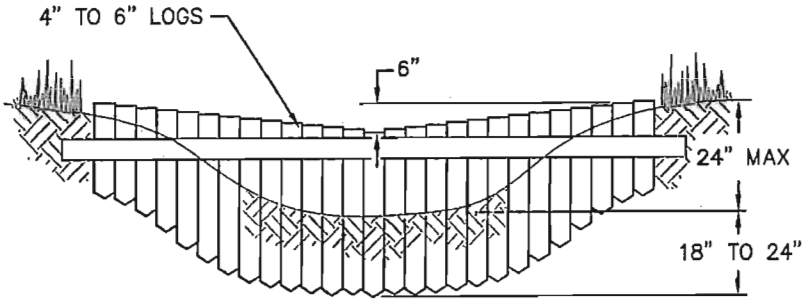

VIEW LOOKING UPSTREAM

'L' = THE DISTANCE SUCH THAT POINTS 'A' AND 'B' ARE OF EQUAL ELEVATION

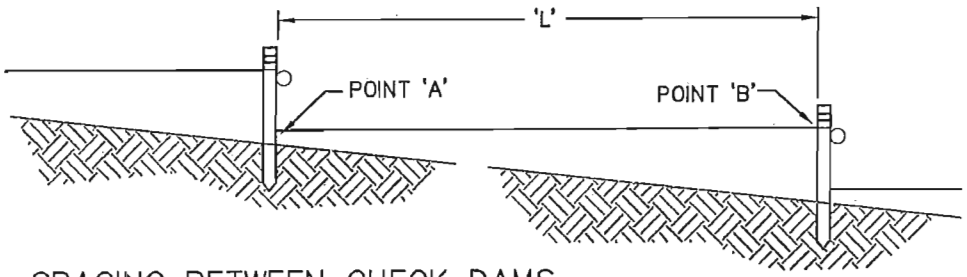

SPACING BETWEEN CHECK DAMS

NOT TO SCALE

NOTE:
KEY THE ENDS OF THE CHECK DAM INTO THE CHANNEL BANK. LOGS SHALL BE PRESSURE TREATED IF GRADE STABILIZATION STRUCTURE IS INTENDED TO BE PERMANENT.

City of South Jordan, Utah

SOUTH JORDAN	LOG CHECK DAM	PLAN 5020

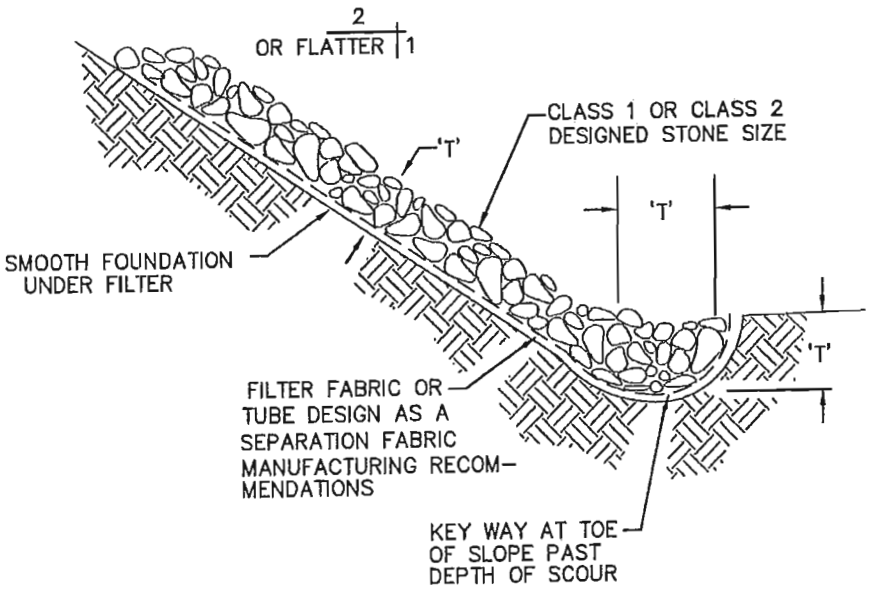

$T=2d_{50}$

TYPICAL SECTION

NOTE:
1. TO BE DESIGNED PER H.E.C. 15–
   FLEXIBLE CHANNEL
2. ROCK SIZE TO BE DESIGNED PER H.E.C. 11

City of South Jordan, Utah

SOUTH JORDAN	RIP RAP PROTECTION	PLAN 5030

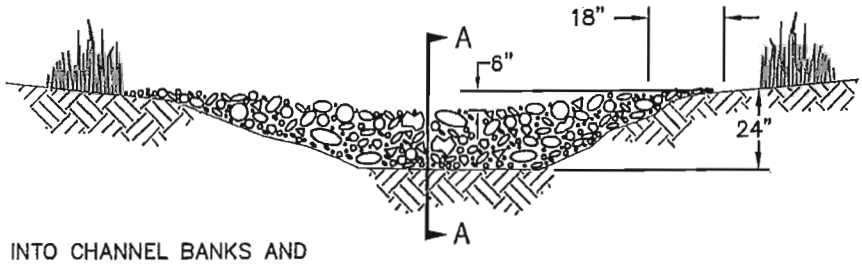

NOTE:
KEY STONE INTO CHANNEL BANKS AND EXTEND IT BEYOND THE ABUTMENTS A MINIMUM OF 18" TO PREVENT FLOW AROUND DAM.

VIEW LOOKING UPSTREAM

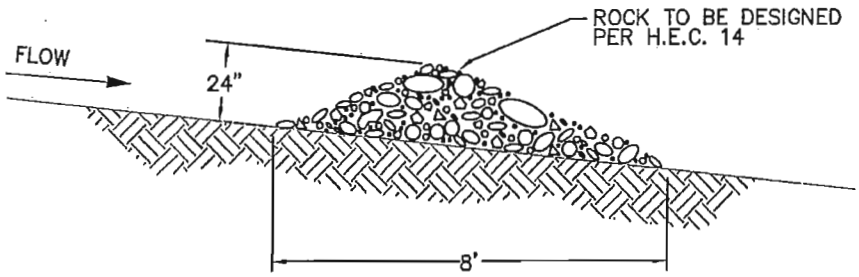

SECTION A - A

'L' = THE DISTANCE SUCH THAT POINTS 'A' AND 'B' ARE OF EQUAL ELEVATION.

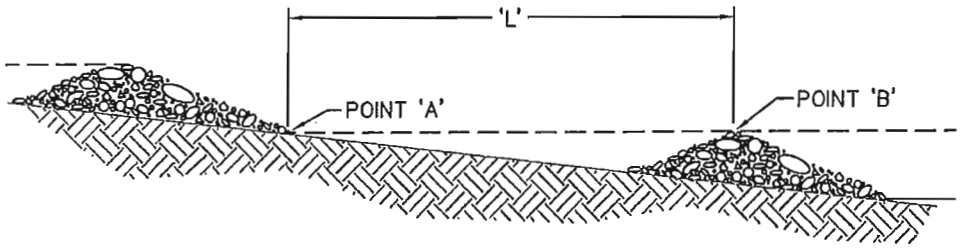

SPACING BETWEEN CHECK DAMS

NOTES:
1. DESIGN PER H.E.C. 14

NOT TO SCALE

City of South Jordan, Utah

SOUTH JORDAN	ROCK CHECK DAM	PLAN 5035

DESIGN HEIGHT (H), WIDTH AND STONE SIZE SHALL
BE DETERMINED BY THE ENGINEER

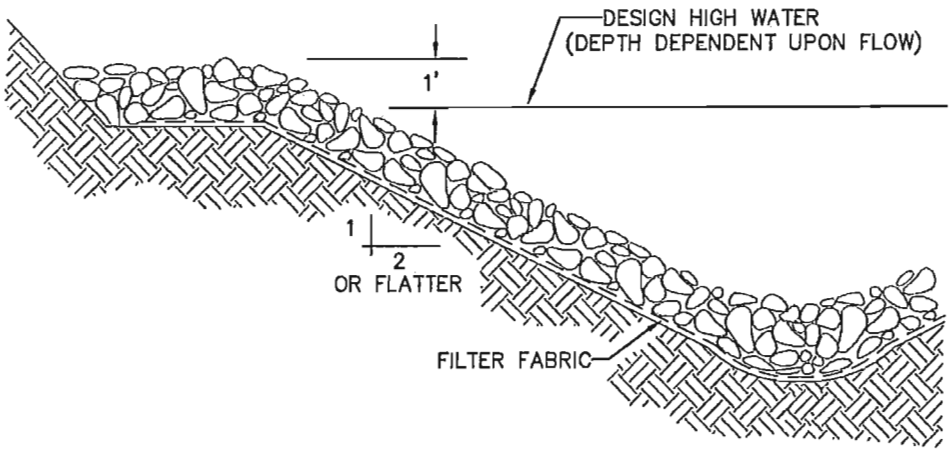

TYPICAL SECTION

NOTES:

1. ROCK SIZE TO BE DESIGNED PER H.E.C. 11
2. TO BE DESIGNED PER H.E.C. 15–
   FLEXIBLE CHANNELS

City of South Jordan, Utah

SOUTH JORDAN	ROCK LINED CHANNEL	PLAN 5040

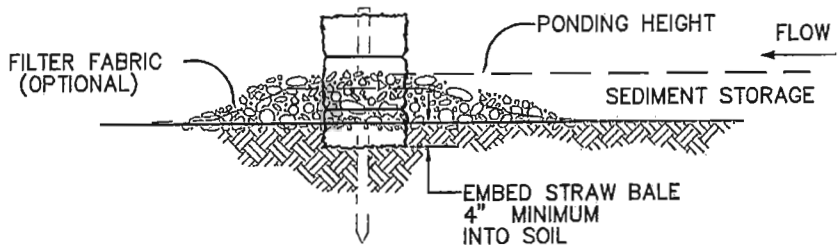

SECTION A – A

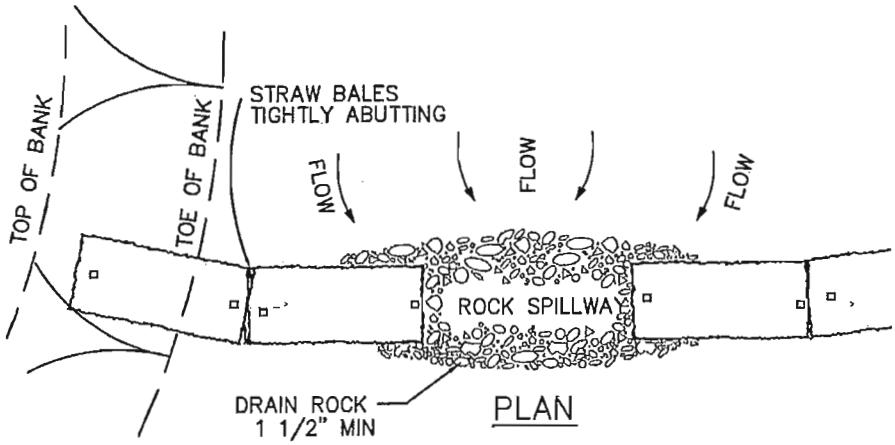

PLAN

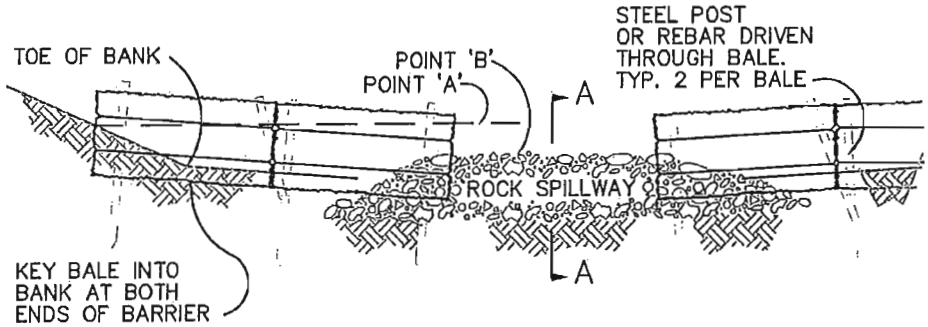

VIEW LOOKING UPSTREAM

NOTES:

1. PLACE BALES PERPENDICULAR TO FLOW.
2. EMBED THE BALE 4" INTO THE SOIL AND "KEY" THE END BALES INTO THE CHANNEL BANKS TO PREVENT FLOW AROUND THE BALES.
3. BALES PLACED IN A ROW WITH ENDS TIGHTLY ABUTTING.
4. POINT "A" SHALL BE HIGHER THAN POINT "B".
5. SPILLWAY HEIGHT SHALL NOT EXCEED 24" .

City of South Jordan, Utah

SOUTH JORDAN	TEMPORARY SEMI-PERVIOUS STRAW BALE SEDIMENT BARRIER	PLAN 5050

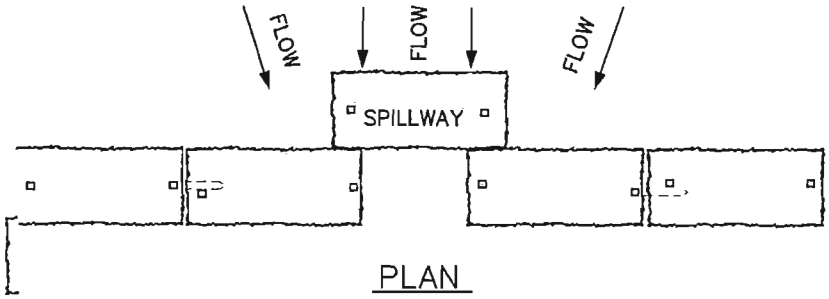

PLAN

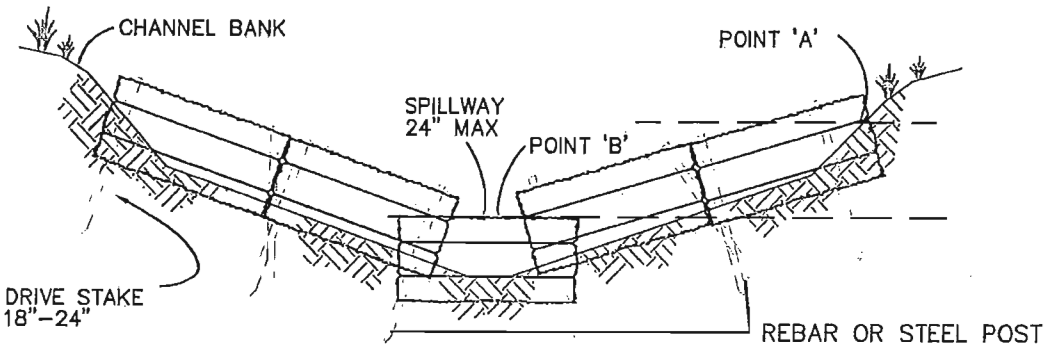

VIEW LOOKING UPSTREAM

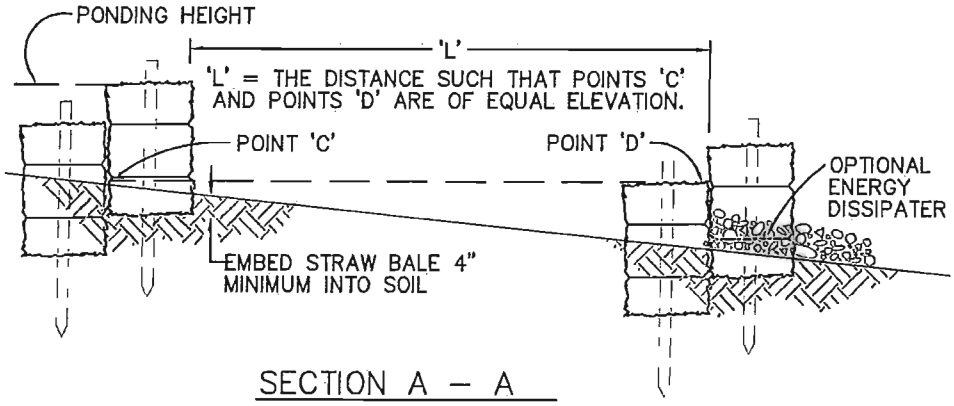

SECTION A – A

SPACING BETWEEN CHECK DAMS

NOT TO SCALE

NOTES:

1. EMBED BALES 4" INTO THE SOIL AND 'KEY' BALES INTO THE CHANNEL BANKS.
2. POINT 'A' MUST BE HIGHER THAN POINT 'B'. (SPILLWAY HEIGHT)
3. PLACE BALES PERPENDICULAR TO THE FLOW WITH ENDS TIGHTLY ABUTTING.
4. SPILLWAY HEIGHT SHALL NOT EXCEED 24" .
5. INSPECT AFTER EACH SIGNIFICANT STORM, MAINTAIN AND REPAIR PROMPTLY.

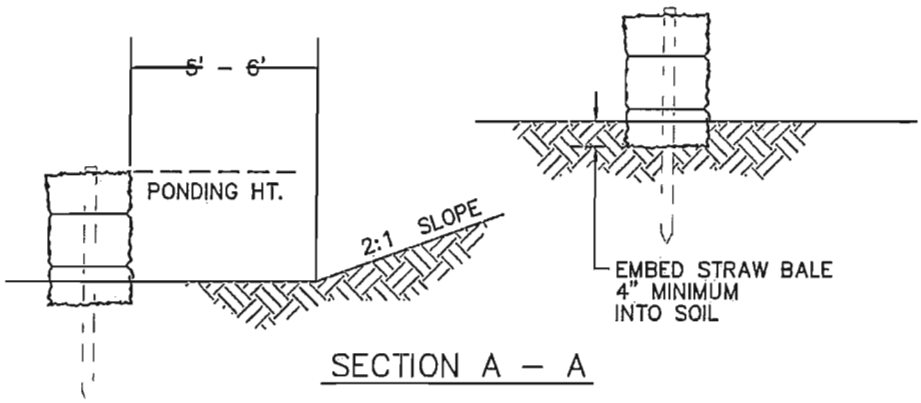

SECTION A – A

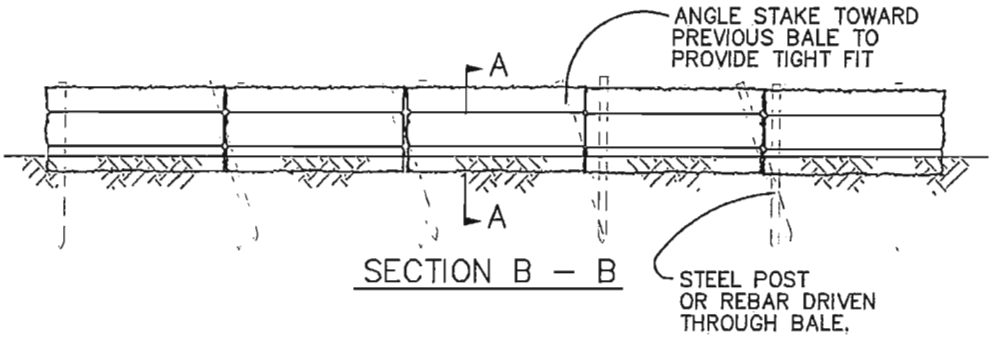

SECTION B – B

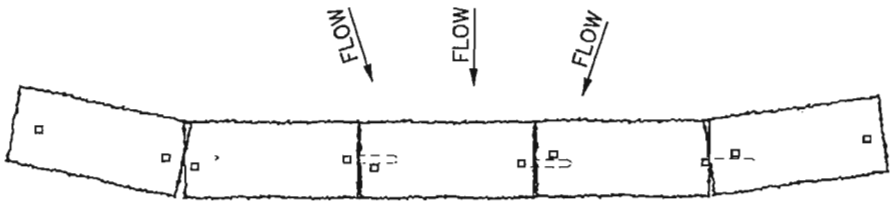

PLAN

NOTES:

1. THE STRAW BALES SHALL BE PLACED ON SLOPE CONTOUR.
2. BALES TO BE PLACED IN A ROW WITH THE ENDS TIGHTLY ABUTTING.
3. KEY IN BALES TO PREVENT EROSION OR FLOW UNDER BALES.

City of South Jordan, Utah

SOUTH JORDAN	TEMPORARY STRAW BALE DIKE	PLAN 5060

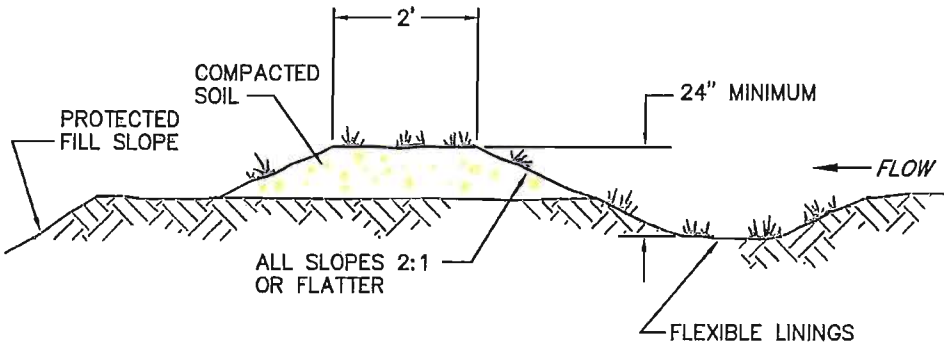

TYPICAL FILL DIVERSION

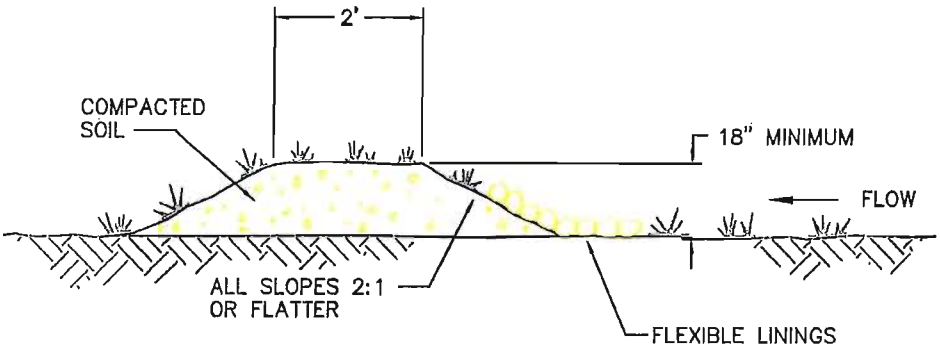

TYPICAL TEMPORARY DIVERSION DIKE

NOTES:

1. THE CHANNEL BEHIND THE DIKE SHALL HAVE POSITIVE GRADE TO A STABILIZED OUTLET.
2. THE DIKE SHALL BE ADEQUATELY COMPACTED TO PREVENT FAILURE.
3. THE DIKE SHALL BE STABILIZED WITH TEMPORARY OR PERMANENT SEEDING OR RIPRAP.

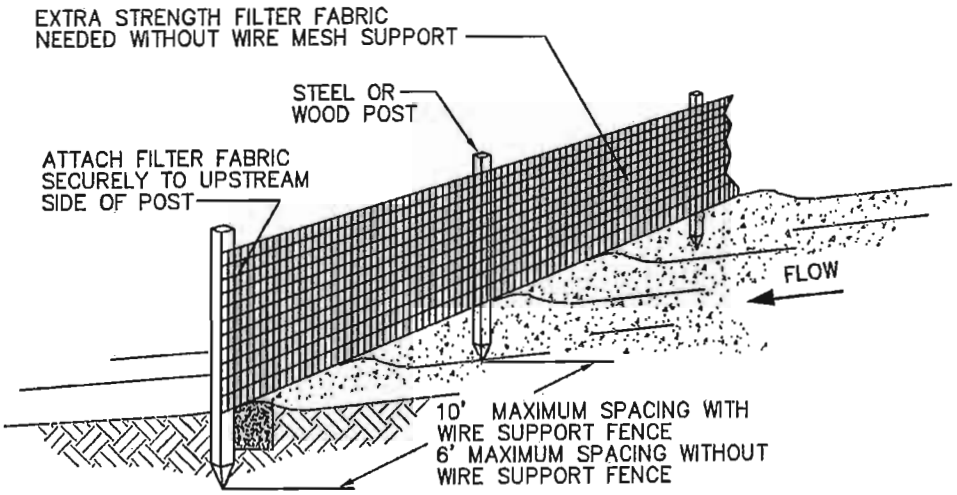

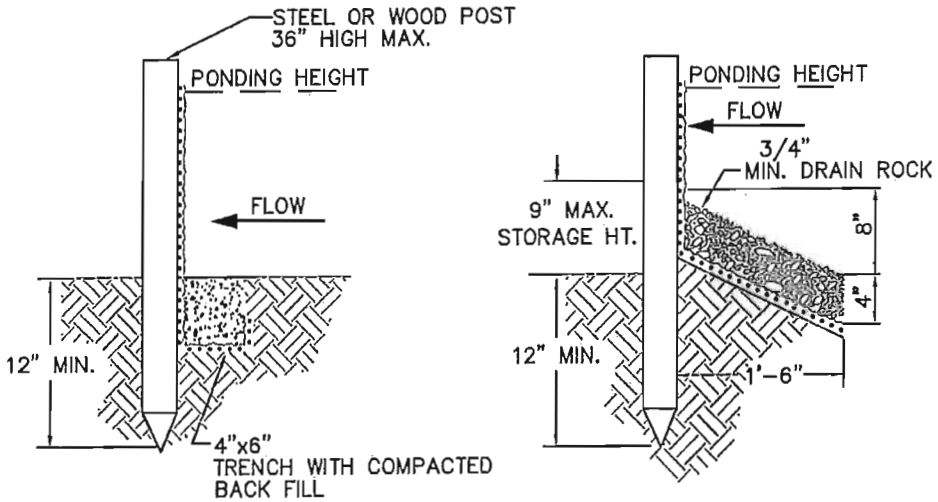

TRENCH DETAIL

INSTALLATION WITHOUT TRENCHING

NOTES:

1. SILT FENCE SHALL BE PLACED ON SLOPE CONTOURS TO MAXIMIZE PONDING EFFICIENCY.
2. INSPECT AND REPAIR FENCE AFTER EACH STORM EVENT AND REMOVE SEDIMENT WHEN NECESSARY. 9" (225mm) MAXIMUM RECOMMENDED STORAGE HEIGHT.
3. REMOVED SEDIMENT SHALL BE DEPOSITED TO DESIGNATED STORAGE AREAS.

NOT TO SCALE

City of South Jordan, Utah

SOUTH JORDAN	SILT FENCE	PLAN 5100

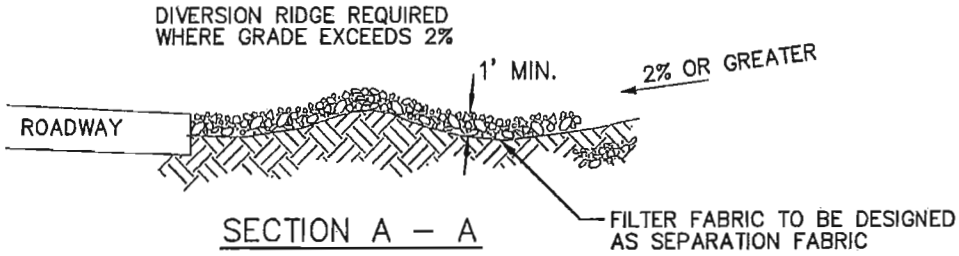

SECTION A – A

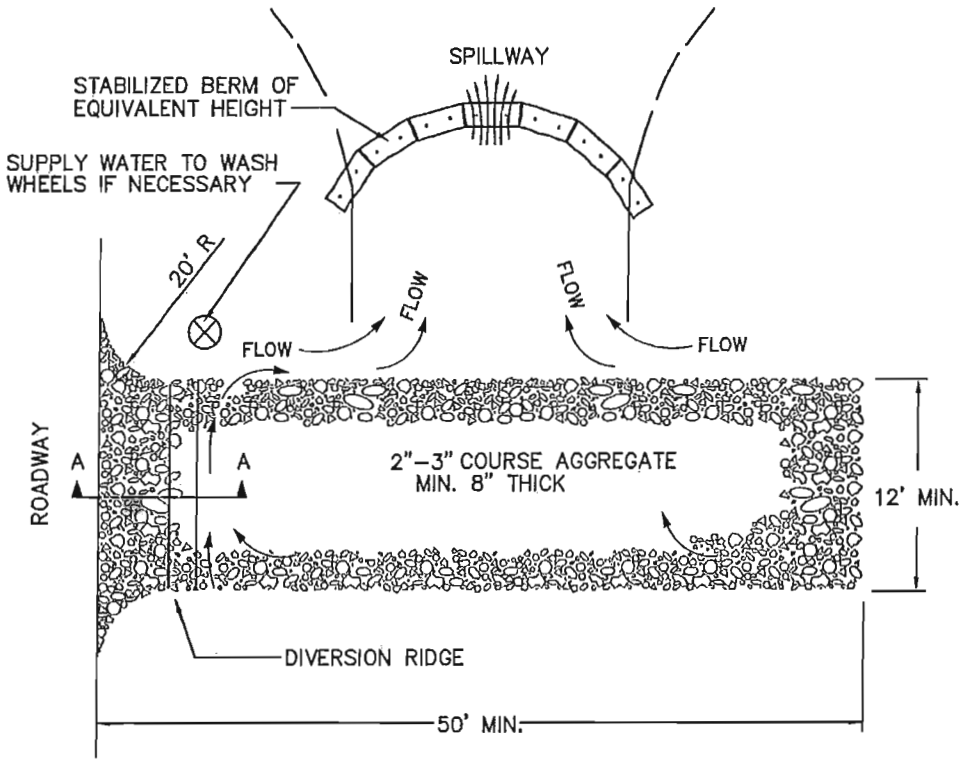

PLAN

NOTES:

1. THE ENTRANCE SHALL BE MAINTAINED IN A CONDITION THAT WILL PREVENT TRACKING OR FLOWING OF SEDIMENT ONTO PUBLIC RIGHT–OF–WAYS. THIS MAY REQUIRE TOP DRESSING, REPAIR AND/OR CLEAN OUT OF ANY MEASURES USED TO TRAP SEDIMENT.
2. WHEN NECESSARY, WHEELS SHALL BE CLEANED PRIOR TO ENTRANCE ONTO PUBLIC RIGHT–OF–WAY.
3. WHEN WASHING IS REQUIRED, IT SHALL BE DONE ON AN AREA STABILIZED WITH CRUSHED STONE THAT DRAINS INTO AN APPROVED SEDIMENT TRAP OR SEDIMENT BASIN.
4. THE INTENT OF THIS IS TO KEEP THE STREETS FREE FROM DIRT AND OR SEDIMENT
5. DEPTH OF AGGREGATE WILL BE DETERMINED BY DESIGN ENGINEER BASED ON EXISTING SOIL TYPE.
6. GEOTEXTILE FABRIC SHALL BE USED FOR ENTRANCE

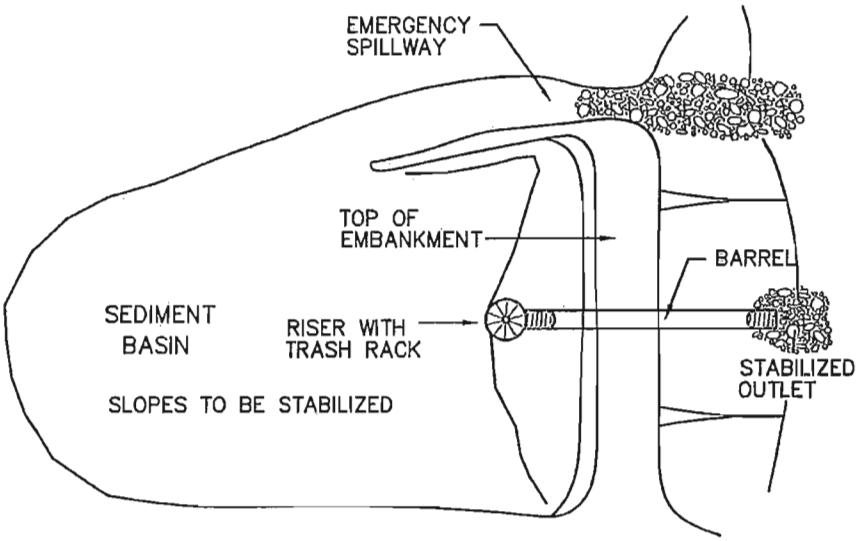

PLAN

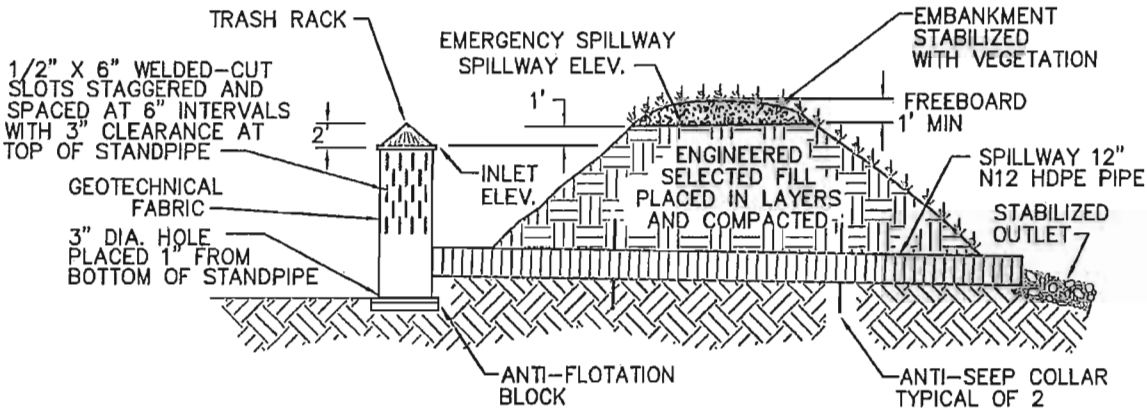

SECTION

NOTES:

1. SEDIMENT BASIN TO BE SIZED PER SEDIMENT LOAD CALCULATIONS.

City of South Jordan, Utah

SOUTH JORDAN	TYPICAL SEDIMENT BASIN	PLAN 5110

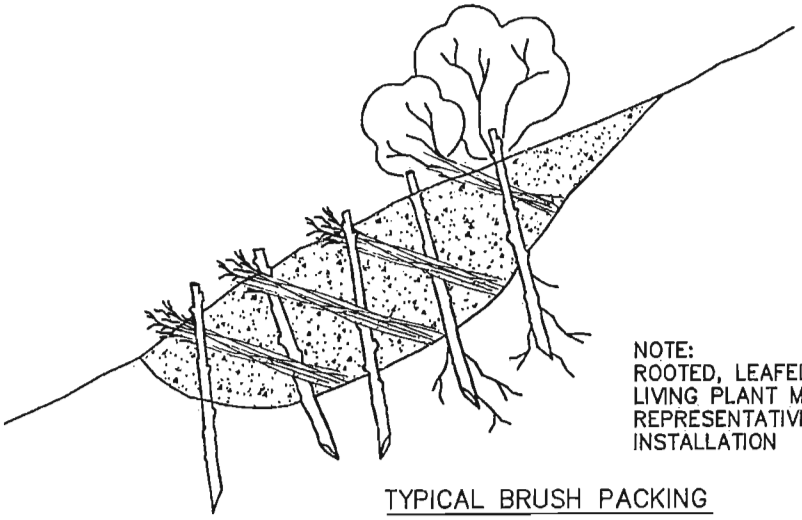

NOTE:
ROOTED, LEAFED CONDITION OF THE LIVING PLANT MATERIAL IS NOT REPRESENTATIVE OF THE TIME OF INSTALLATION

TYPICAL BRUSH PACKING

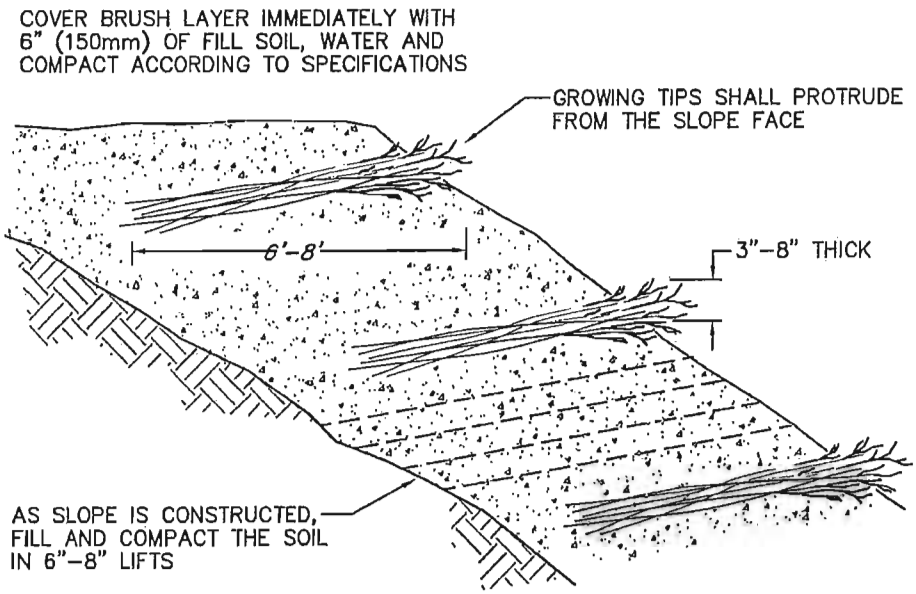

BIO TECHNICAL STABILIZATION

NOTES:

1. REPAIR OR FILLING OF SMALL SLUMPS, SLIPOUTS, AND HEADOUTS.
2. PLANT MATERIAL HARVEST & INSTALLATION SHOULD BE PERFORMED SURRING IT'S DORMANT SEASON.
3. USE SITE APPROPRIATE PLANTS.
4. ALL CUTTINGS SHOULD BE SOAKED FOR A MINIMUM OF 24 HOURS.
5. BRUSHLAYERING USES LIVE PLANT MATERIAL AND MUST BE TREATED AS SUCH.

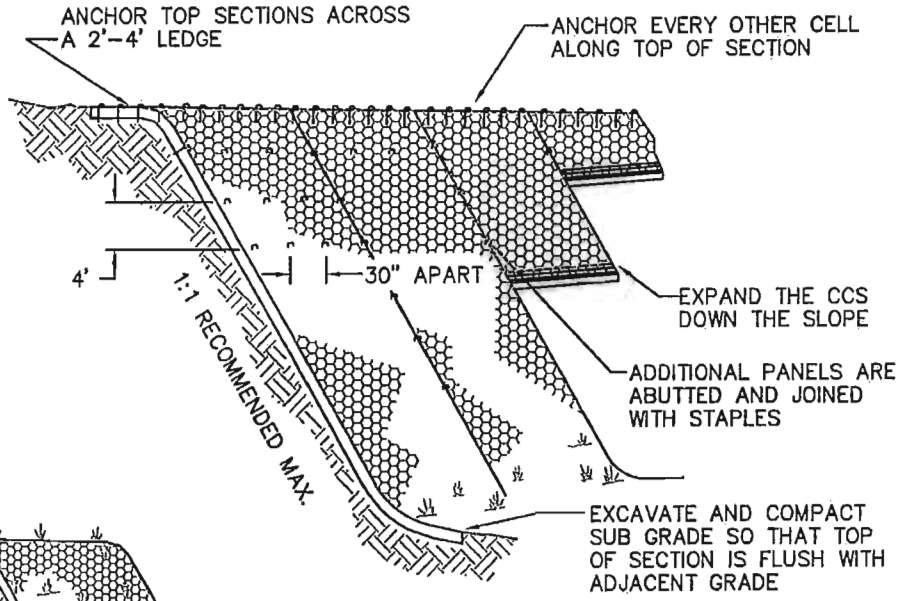

CCS INFILLED WITH AGGREGATE

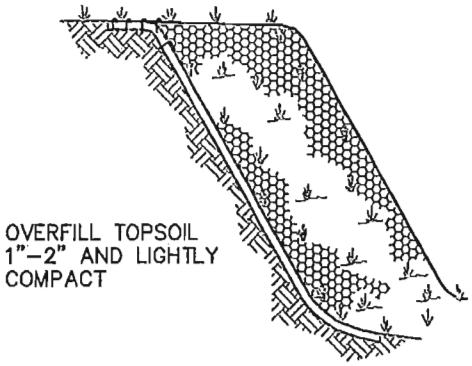

CCS INFILLED WITH TOPSOIL AND VEGETATED WITH GRASS

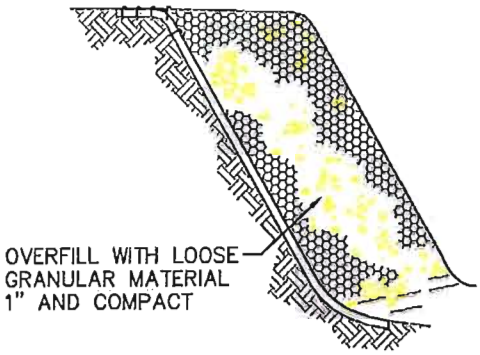

NOTES:

1. SURFACE OF SLOPE SHALL BE LEVELED WITH GULLIES FILLED AND WELL COMPACTED.
2. SHAPE AND COMPACT SUB GRADE SURFACES TO DESIGN ELEVATIONS AND GRADES.
3. THE CELLS SHALL BE ANCHORED SECURELY TO PREVENT DISPLACEMENT AND DEFORMATION OF PANELS WHEN BACKFILLING.
4. INFILL FROM CREST OF THE SLOPE TO TOE TO PREVENT DISPLACEMENT. LIMIT DROP HEIGHT TO 3' .

NOT TO SCALE

City of South Jordan, Utah

SOUTH JORDAN	CELLULAR CONFINEMENT SYSTEM FOR SLOPE STABILIZATION	PLAN 5205

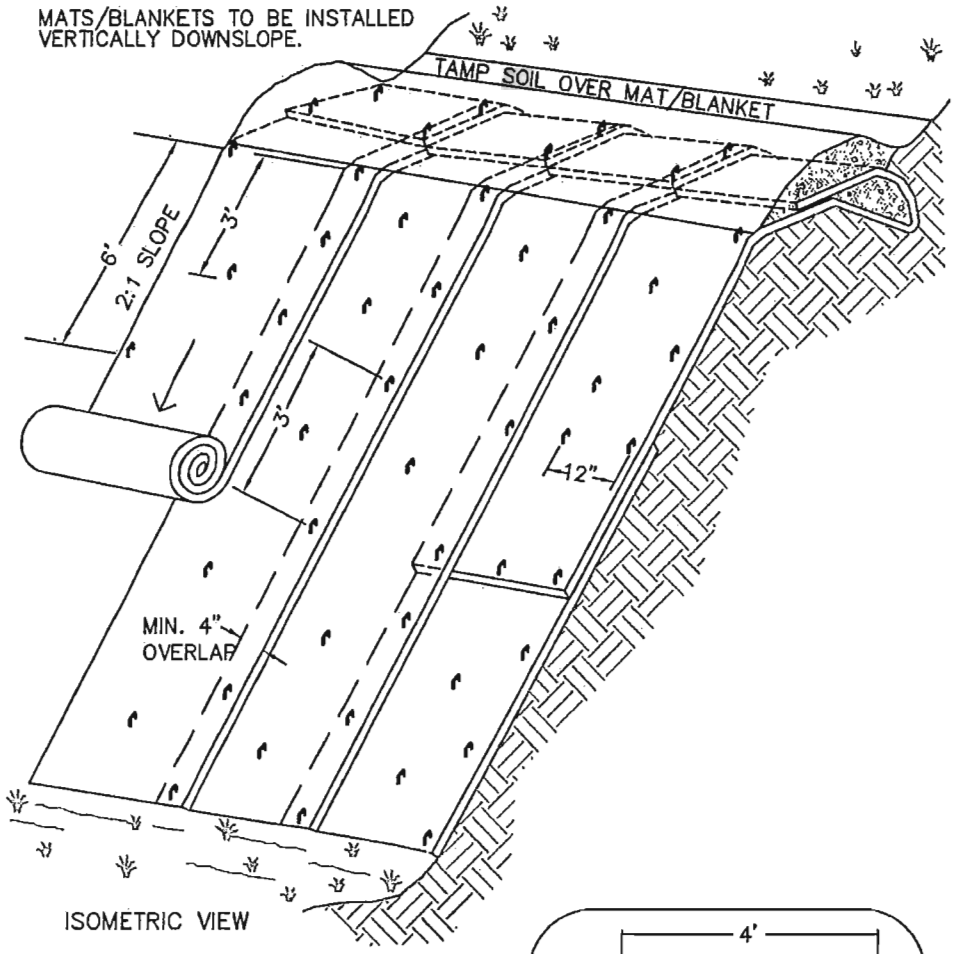

ISOMETRIC VIEW

TYPICAL SLOPE
SOIL STABLIZATION

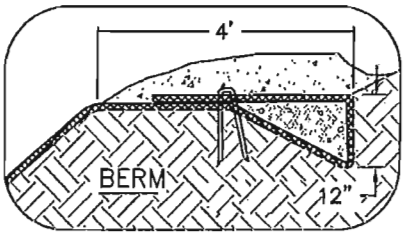

NOT TO SCALE

NOTES:

1. SLOPE SURFACE SHALL BE FREE OF ROCKS, CLODS, STICKS, SNOW, AND GRASS. MATS/ BLANKETS SHALL HAVE GOOD SOIL CONTACT.
2. APPLY PERMANENT SEEDING BEFORE PLACING BLANKETS.
3. LAY BLANKETS LOOSELY AND STAKE OR STAPLE TO MAINTAIN DIRECT CONTACT WITH THE SOIL. DO NOT STRETCH.
4. STAPLES LENGTH TO BE LONG ENOUGH TO BE EMBEDDED INTO UNDISTURBED SOIL.

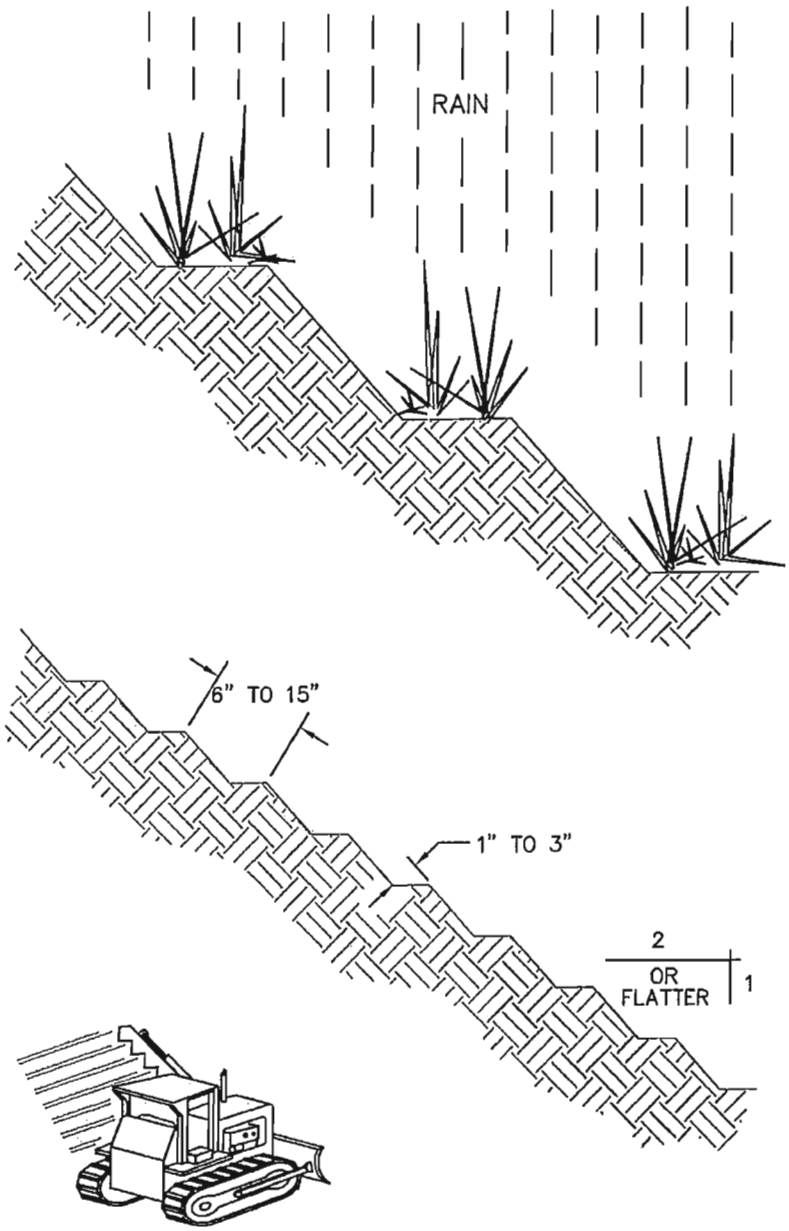

NOTE:

TO BE USED ON
SLOPE 4:1 & GREATER

NOT TO SCALE

City of South Jordan, Utah

SOUTH JORDAN	GROOVED OR SERRATED SLOPE	PLAN 5215

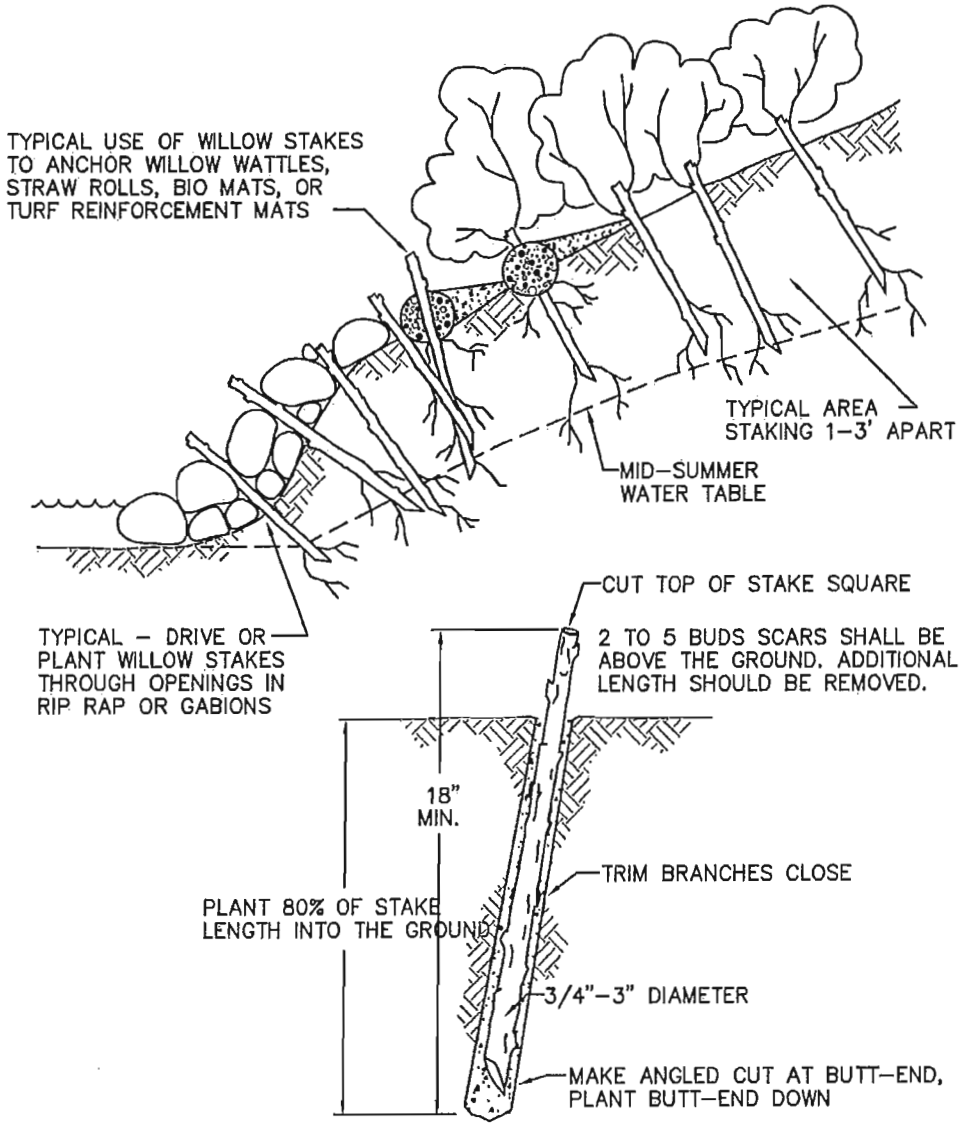

NOTES:

NOT TO SCALE

1. HARVEST AND PLANT STAKES DURING THE DORMANT SEASON.
2. USE HEALTHY, STRAIGHT AND LIVE WOOD AT LEAST 1 YEAR OLD.
3. MAKE CLEAN CUTS AND DO NOT DAMAGE STAKES OR SPLIT ENDS DURING INSTALLATION, USE A PILOT BAR IN FIRM SOILS.
4. SOAK CUTTINGS FOR 24 HOURS (MIN.) PRIOR TO INSTALLATION.
5. TAMP THE SOIL AROUND THE STAKE.
6. PLANTING MATERIAL SHOULD BE APPROPRIATE TO THE SITE AND TO BE APPROVED BY THE CITY OF WEST JORDAN
7. STREAM BANK ONLY

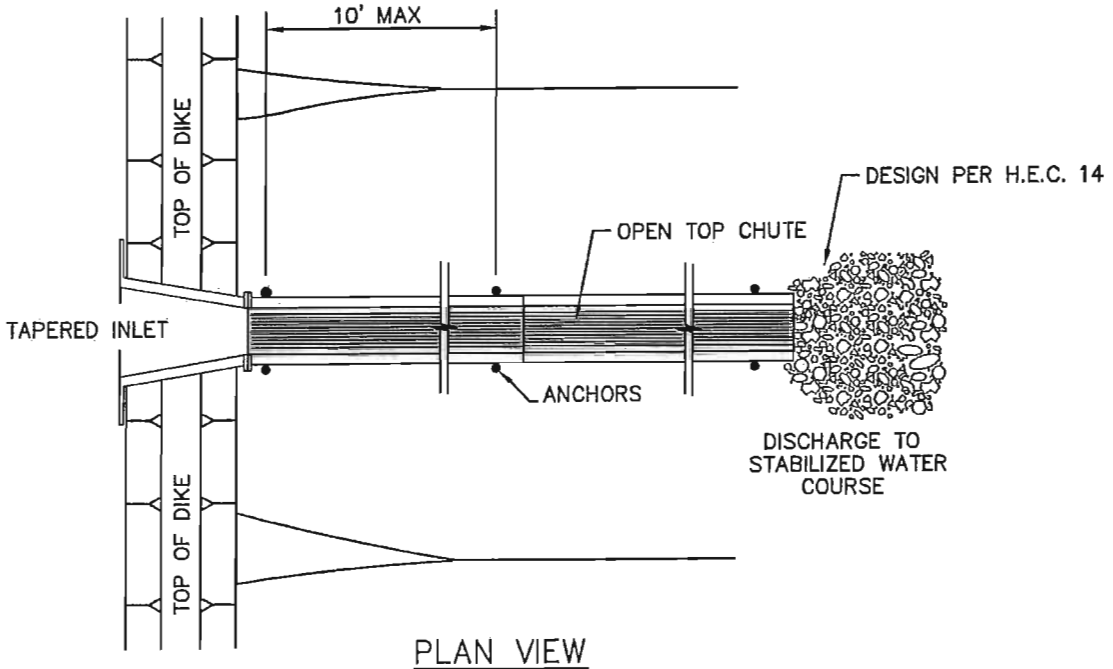

PLAN VIEW

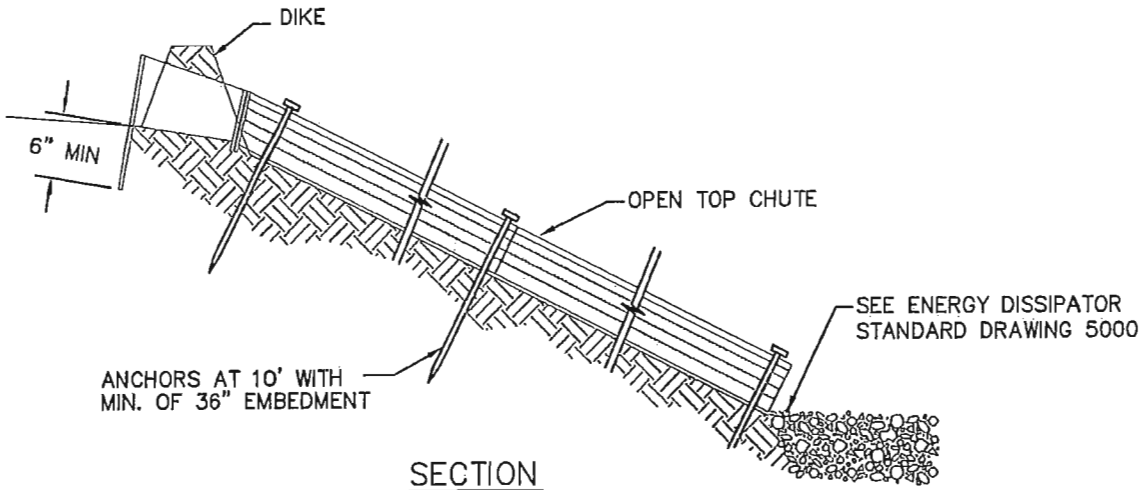

SECTION

City of South Jordan, Utah

SOUTH JORDAN	OVER SIDEDRAIN	PLAN 5225

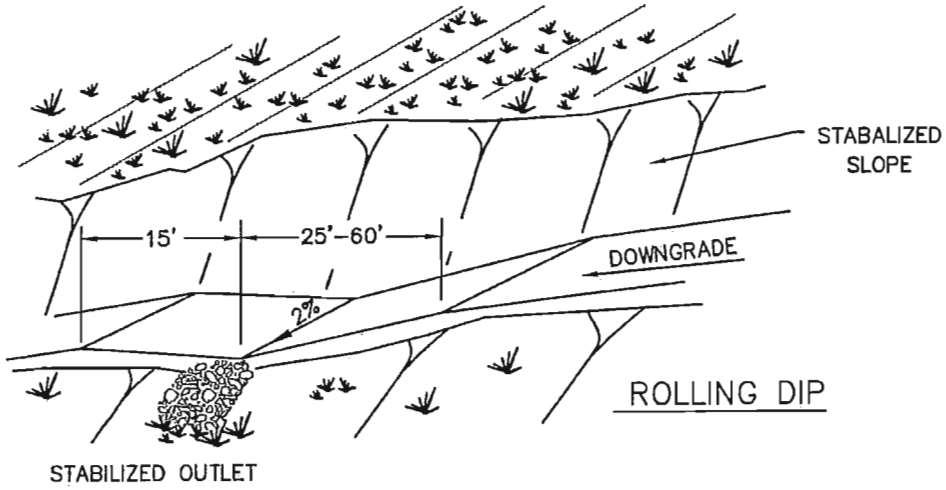

ROLLING DIP

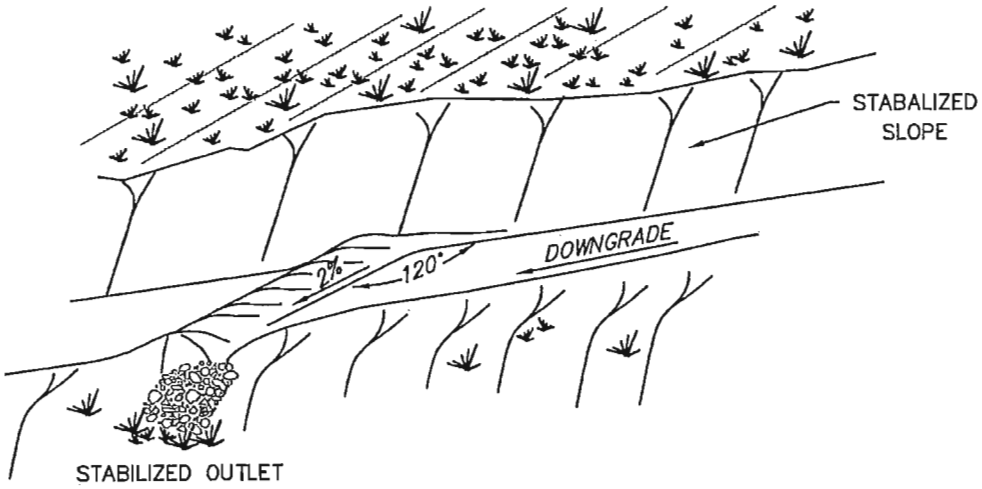

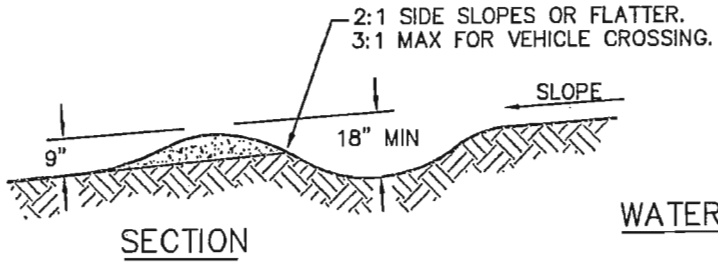

SECTION

WATER BAR

NOTES:

1. SPACING TO BE CALCULATED BASED ON CONTRIBUTING AREA.
2. STABALIZE GRADE SURFACE SUCH THAT RUNOFF WILL REMAIN ON GRADE SURFACE.
3. SOIL TO BE STABALIZED WITH APPROVED VEGETATION.
4. NEVER OUTLET WATER BARS OR ROLLING DIPS ONTO UNPROTECTED FILL SLOPES

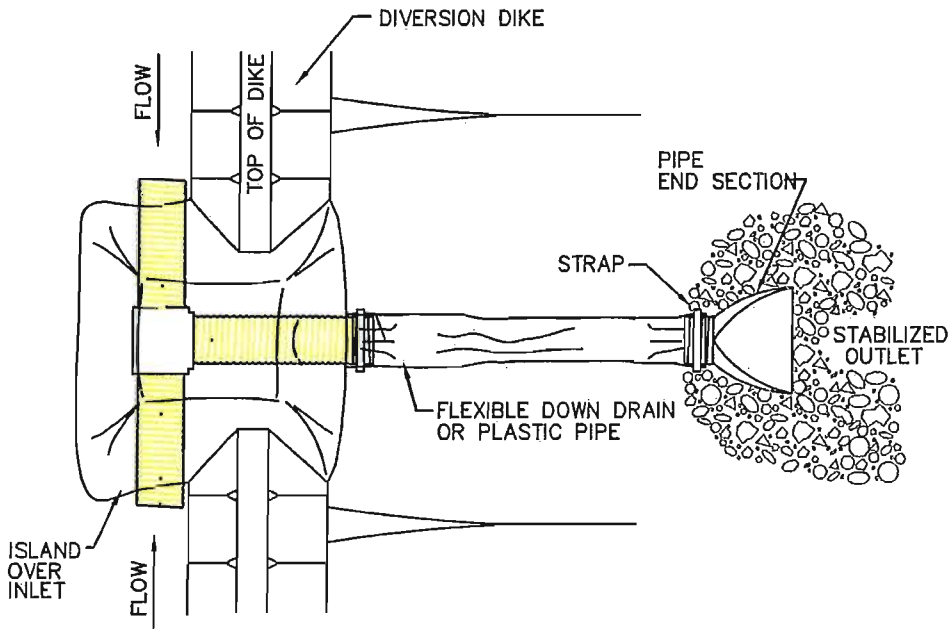

PLAN VIEW

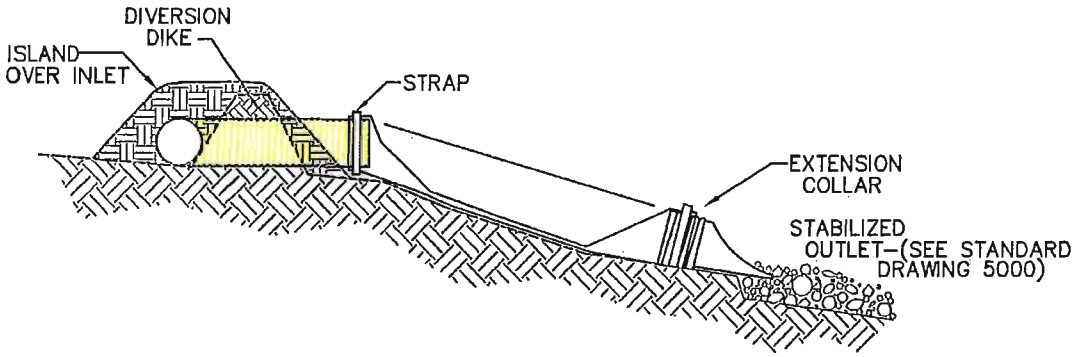

SECTION

NOTES:

1. ENTRANCE SECTION SHALL BE WELL ENTRENCHED AND STABLE
2. DRAIN SHOULD EXTEND DOWNSLOPE BEYOND THE TOE OF THE SLOPE TO A STABLE AREA OR APPROPRIATELY STABILIZED OUTLET.

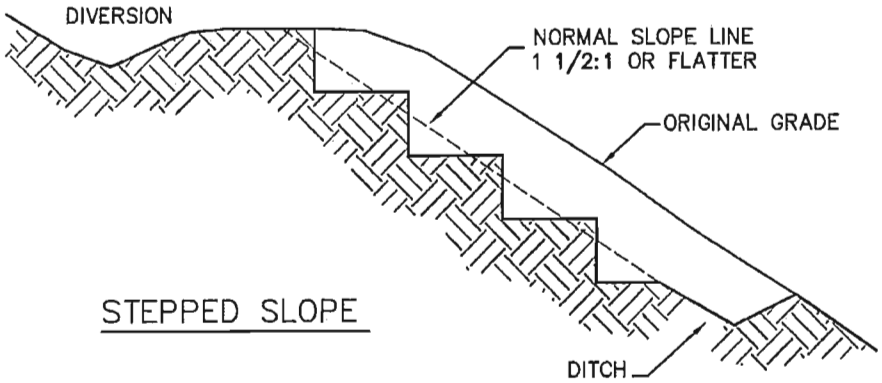

STEPPED SLOPE

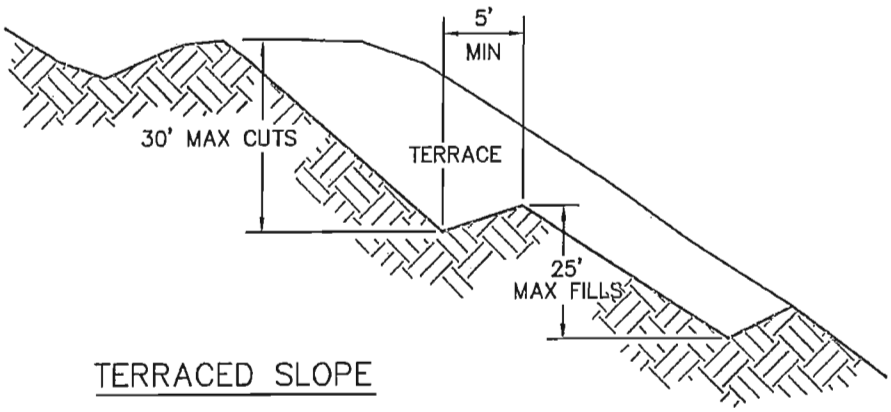

TERRACED SLOPE

NOT TO SCALE

NOTES:

1. VERTICAL CUT DISTANCE SHALL BE LESS THAN HORIZONTAL DISTANCE.
2. VERTICAL CUT SHALL NOT EXCEED 2 FT. IN SOFT MATERIAL AND 3 FT. IN ROCKY MATERIAL.

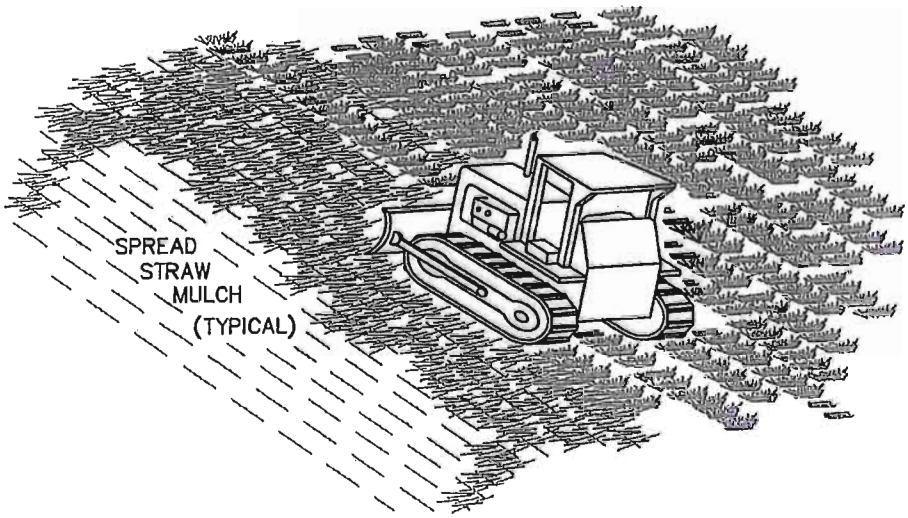

STRAW ANCHORING

NOTES:

1. ROUGHEN SLOPE WITH BULLDOZER
2. BROADCAST SEED AND FERTILIZER.
3. SPREAD STRAW TO COVER SOIL WITH APPROXIMATELY 30% COVERAGE
4. APPLY STRAW TO SLOPE SUCH THAT COVERAGE CAN NOT BE REDUCED BY NATURAL ELEMENTS SUCH AS PRECIPITATION OR WIND.
5. CRIMP STRAW WITH AN APPROVED CRIMPER IN STAGES TO COVER APPROXIMATELY 30% COVERAGE.
6. REPEAT STEPS 3 & 4 UNTIL TOTAL STRAW TONAGE IS APPLIED

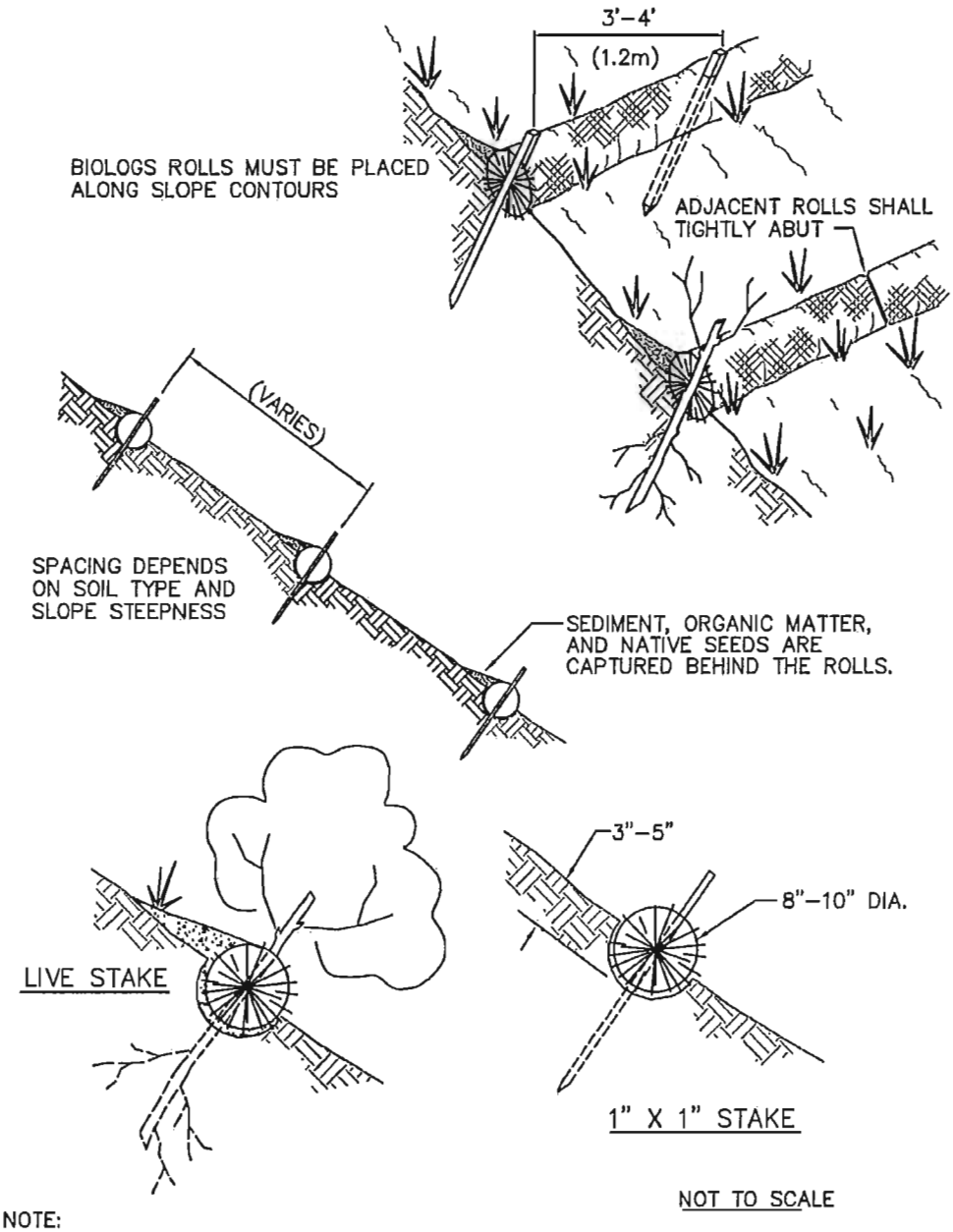

NOT TO SCALE

NOTE:

1. STRAW ROLL INSTALLATION REQUIRES THE PLACEMENT AND SECURE STAKING OF THE ROLL IN A TRENCH, 3"–5" DEEP, DUG ON CONTOUR. RUNOFF RUNOFF MUST NOT BE ALLOWED TO RUN UNDER OR AROUND ROLL.
2. SPACING TO BE CALCULATED USING THE SOIL TOLERANCE FACTOR "T"

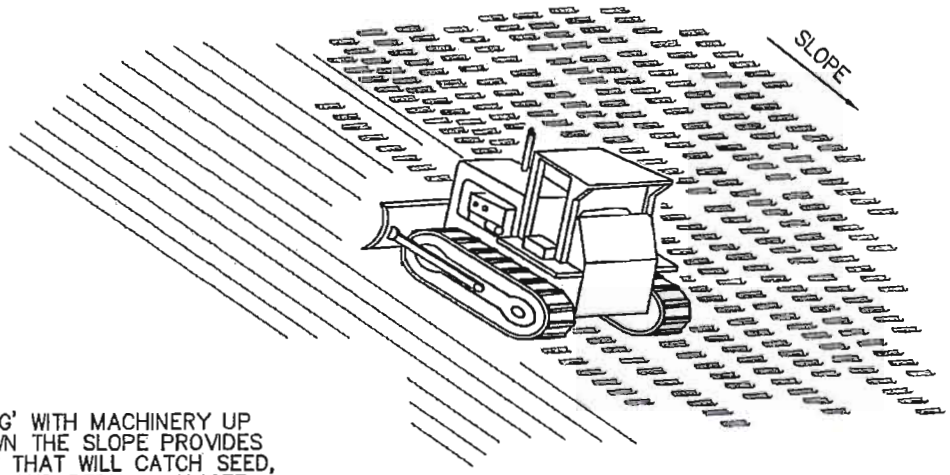

'TRACKING' WITH MACHINERY UP AND DOWN THE SLOPE PROVIDES GROOVES THAT WILL CATCH SEED, RAINFALL AND REDUCE RUNOFF.

TRACKING

City of South Jordan, Utah

SOUTH JORDAN	SURFACE ROUGHENING	PLAN 5255

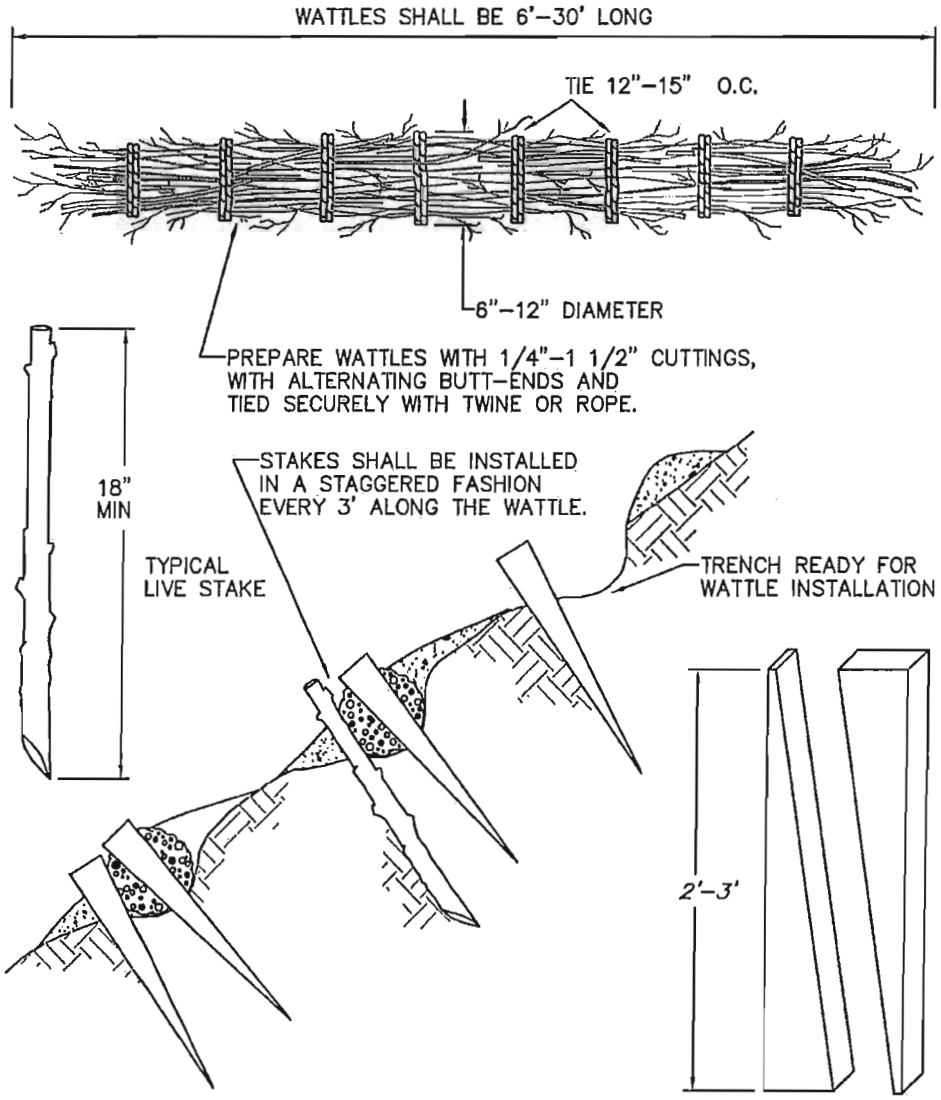

TYPICAL CONSTRUCTION STAKE
SAW 2X4 LUMBER ON DIAGONAL

NOT TO SCALE

NOTES:

1. HARVEST AND INSTALL WATTLES DURING DORMANT SEASON.
2. INSTALL WATTLES ON SLOPE CONTOURS.
3. ALL WORK PROCEEDS FROM THE BOTTOM OF THE SLOPE TO THE TOP.
4. FILL OR PARTIALLY COVER WATTLE WITH SOIL FROM SLOPE OR TRENCH ABOVE.
5. COMPACT AND WORK SOIL INTO COMPLETED WATTLES.
6. CHOOSE PLANT MATERIALS APPROPRIATE FOR THE SITE
7. ALL CUTTINGS SHOULD BE SOADKED FOR A MINIMUM OF 24 HOURS.

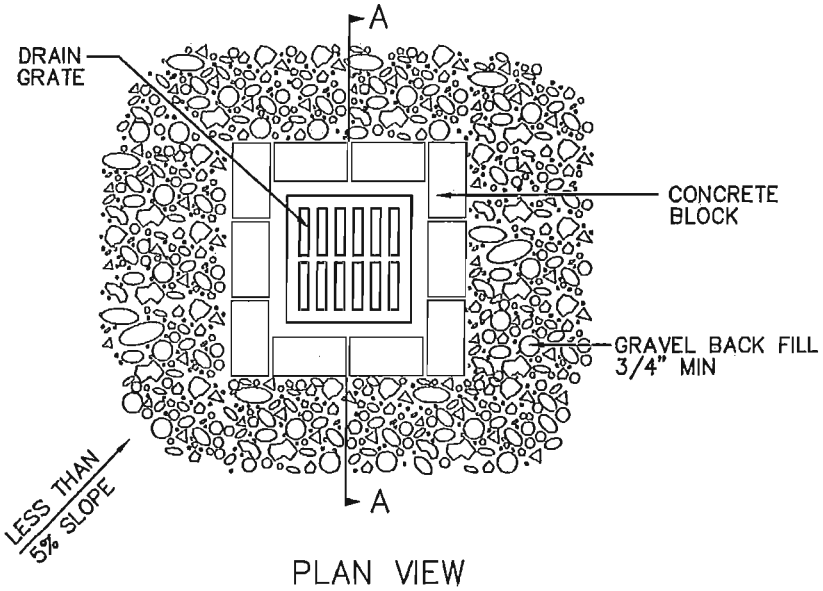

PLAN VIEW

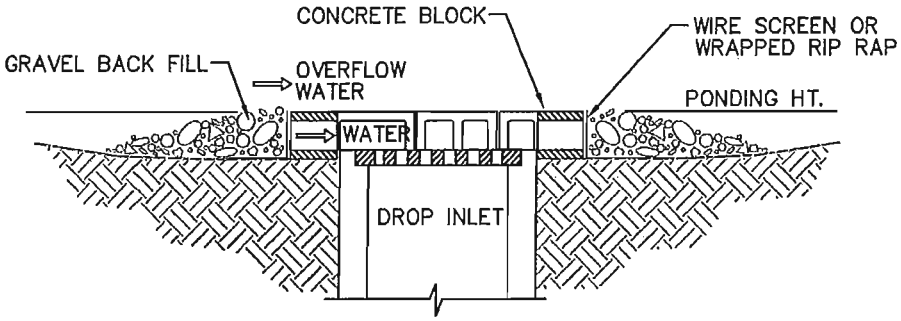

SECTION A – A

NOTES:

1. DROP INLET SEDIMENT BARRIERS ARE TO BE USED FOR SMALL, NEARLY LEVEL DRAINAGE AREAS. (LESS THAN 5%)
2. EXCAVATE A BASIN OF SUFFICIENT SIZE ADJACENT TO THE DROP INLET.
3. THE TOP OF THE STRUCTURE (PONDING HEIGHT) MUST BE WELL BELOW THE GROUND ELEVATION DOWN SLOPE TO PREVENT RUNOFF FROM BYPASSING THE INLET. A TEMPORARY DIKE MAY BE NECESSARY ON THE DOWN SLOPE SIDE OF THE STRUCTURE.
4. INSTALL FABRIC ON TOP OF GRATE.

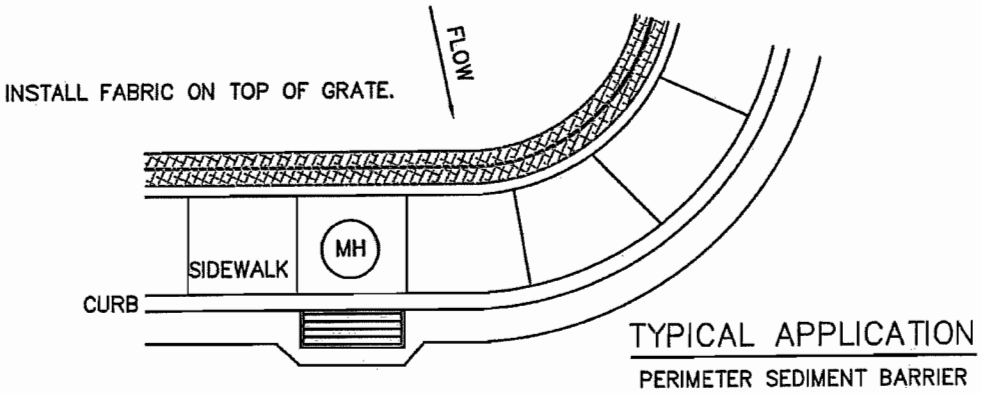

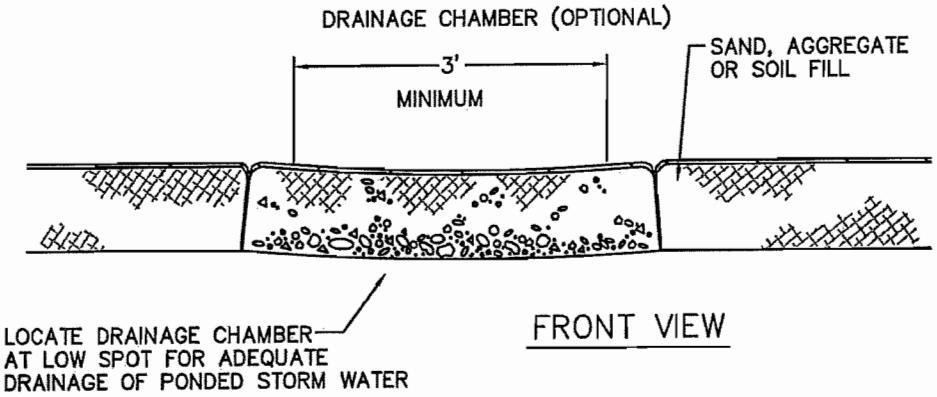

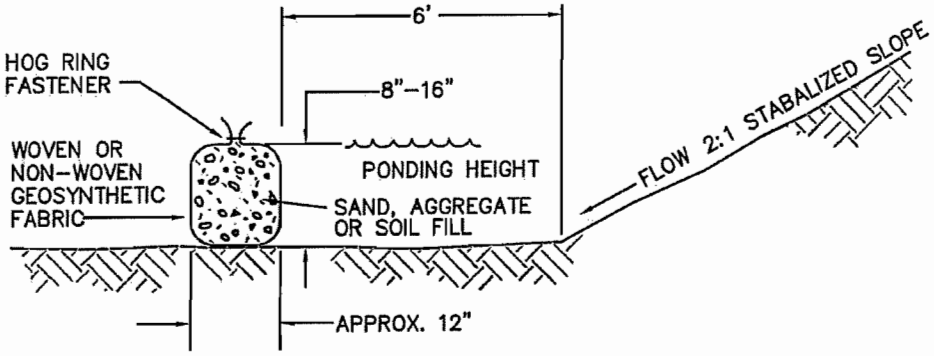

City of South Jordan, Utah

SOUTH JORDAN	CONTINOUS BERM	PLAN 5305

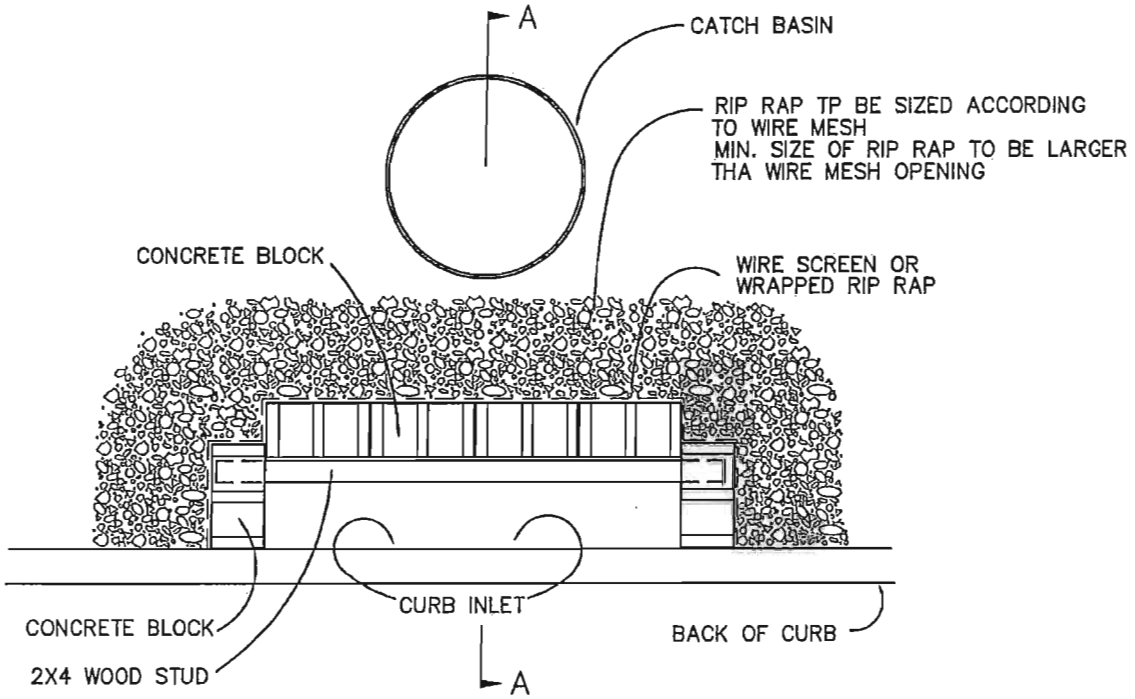

PLAN VIEW

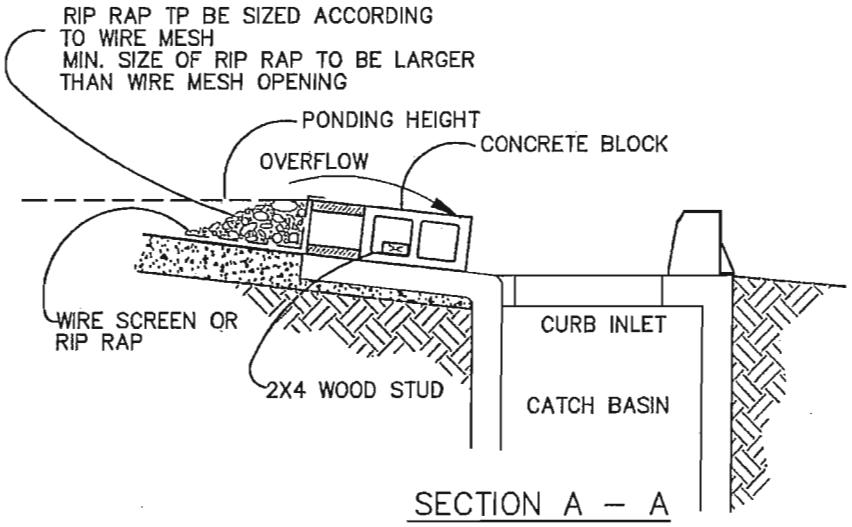

SECTION A – A

NOTES:

1. USE BLOCK AND GRAVEL TYPE SEDIMENT BARRIER WHEN CURB INLET IS LOCATED IN GENTLY SLOPING STREET SEGMENT, WHERE WATER CAN POND AND ALLOW SEDIMENT TO SEPARATE FROM RUNOFF.
2. BARRIER SHALL ALLOW FOR OVERFLOW FROM SEVERE STORM EVENT.
3. INSPECT BARRIERS AND REMOVE SEDIMENT AFTER EACH STORM EVENT. SEDIMENT AND GRAVEL MUST BE REMOVED FROM THE TRAVELED WAY IMMEDIATELY.

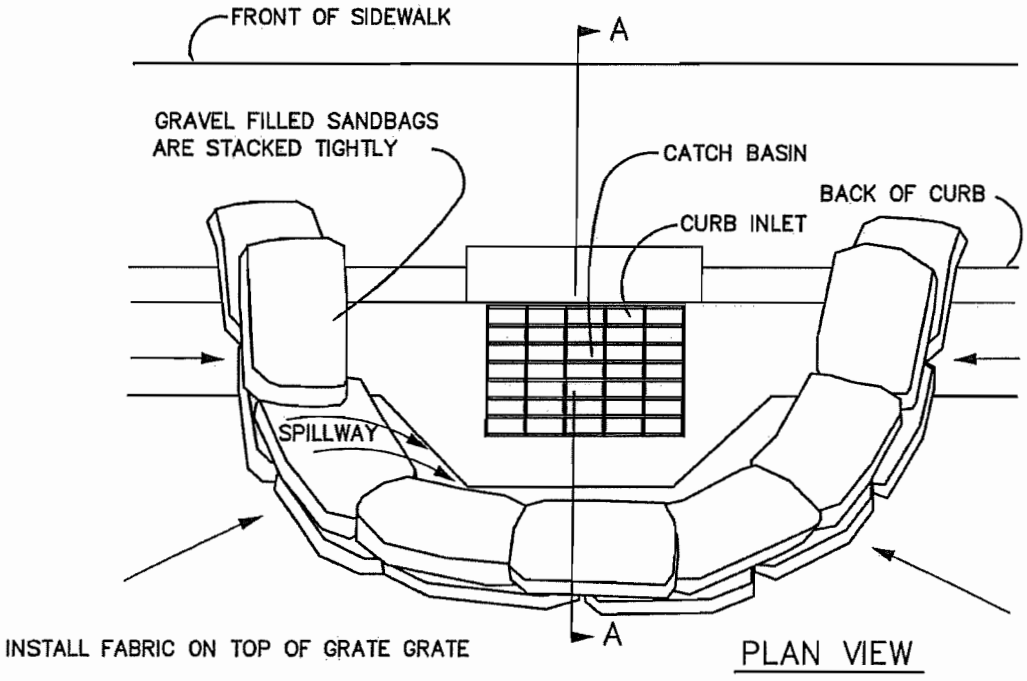

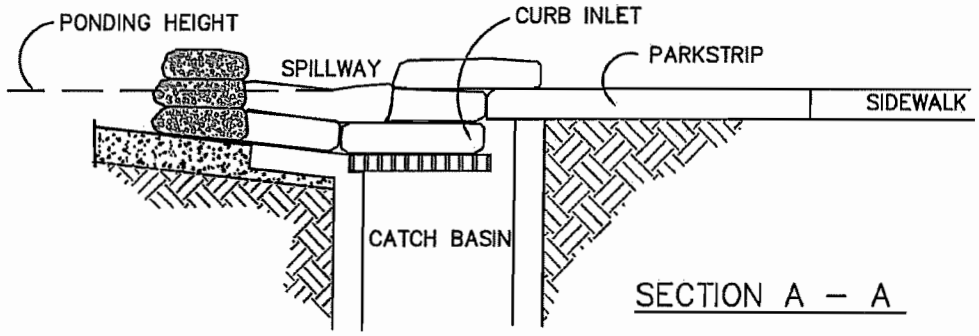

NOTES:

1. PLACE CURB TYPE SEDIMENT BARRIERS ON GENTLY SLOPING STREET SEGMENTS WHERE WATER CAN POND AND ALLOW SEDIMENT TO SEPARATE FROM RUNOFF.
2. SANDBAGS, OF EITHER BURLAP OR WOVEN GEOTEXTILE FABRIC, ARE FILLED WITH GRAVEL, LAYERED AND PACKED TIGHTLY.
3. LEAVE ONE SANDBAG GAP IN THE TOP ROW TO PROVIDE A SPILLWAY FOR OVERFLOW.
4. INSPECT BARRIERS AND REMOVE SEDIMENT AFTER EACH STORM EVENT. SEDIMENT AND GRAVEL MUST BE REMOVED FROM THE TRAVELED WAY IMMEDIATELY.

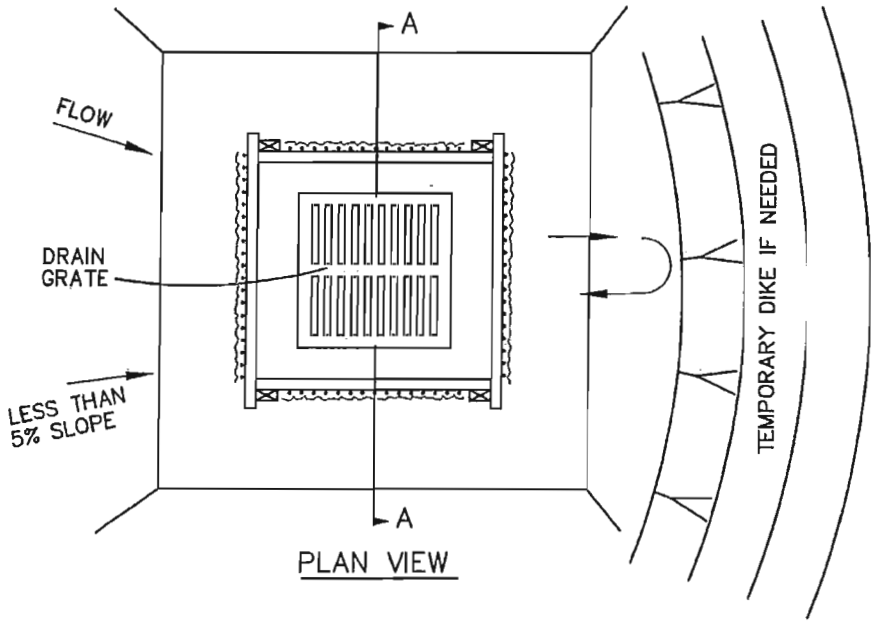

PLAN VIEW

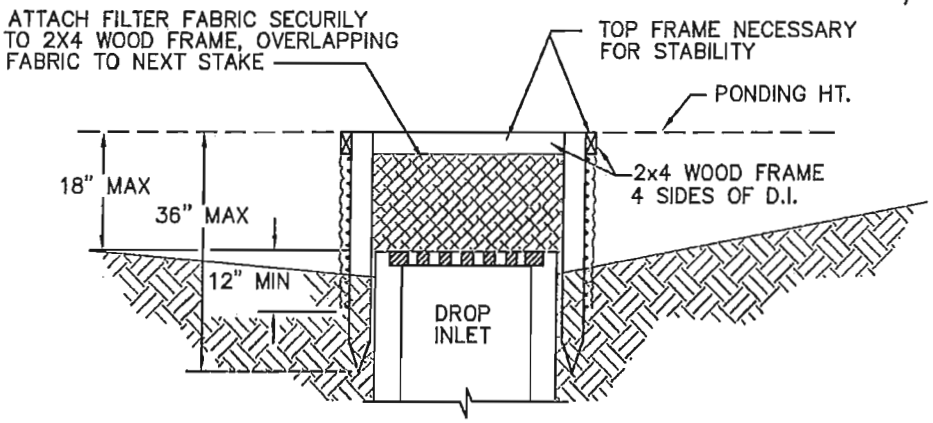

SECTION A–A

NOTES:

1. DROP INLET SEDIMENT BARRIERS ARE TO BE USED FOR SMALL, NEARLY LEVEL DRAINAGE AREAS. (LESS THAN 5%)
2. USE 2"X4" WOOD OR EQUIVALENT METAL STAKES, 3' MINIMUM LENGTH.
3. INSTALL 2"X4" WOOD TOP FRAME TO INSURE STABILITY.
4. THE TOP OF THE FRAME (PONDING HEIGHT) MUST BE WELL BELOW THE GROUND ELEVATION DOWN SLOPE TO PREVENT RUNOFF FROM BY-PASSING THE INLET. A TEMPORARY DIKE MAY BE NECESSARY ON THE DOWN SLOPE SIDE OF THE STRUCTURE.

NOT TO SCALE

City of South Jordan, Utah

SOUTH JORDAN	SILT FENCE DROP INLET SEDIMENT BARRIER	PLAN 5325

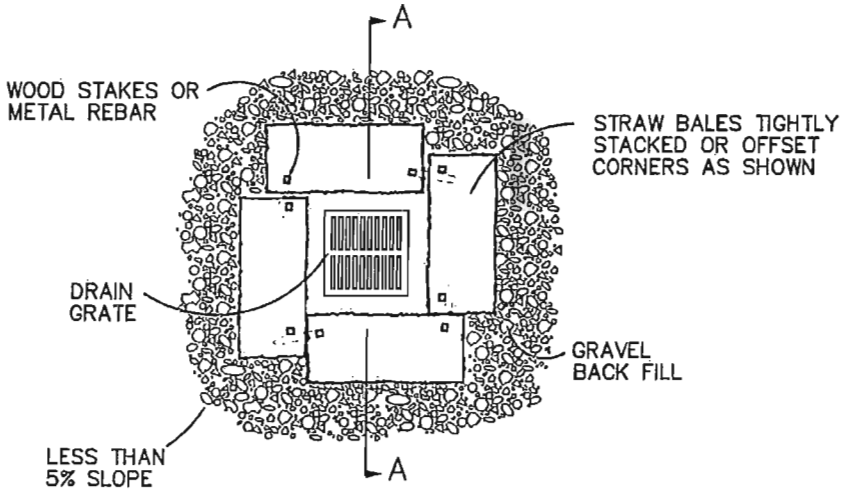

PLAN VIEW

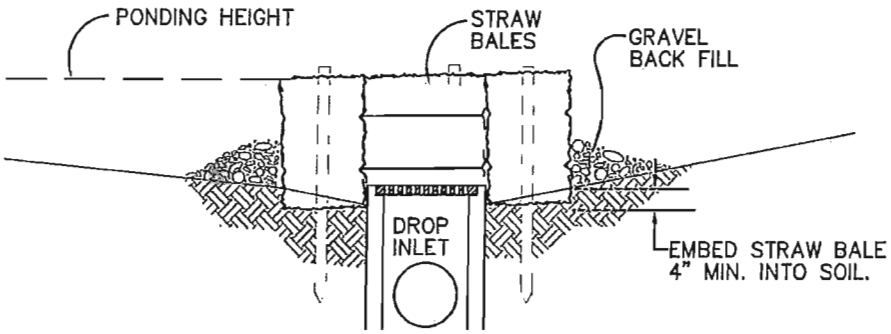

SECTION A–A

NOTES:

1. DROP INLET SEDIMENT BARRIERS ARE TO BE USED FOR SMALL, NEARLY LEVEL DRAINAGE AREAS. (LESS THAN 5%)
2. EMBED THE BALES 4" INTO THE SOIL AND OFFSET CORNERS OR PLACE BALES WITH ENDS TIGHTLY ABUTING. GRAVEL BACK FILL WILL PREVENT EROSION OR FLOW AROUND THE BALES.
3. THE TOP OF THE STRUCTURE (PONDING HEIGHT) MUST BE WELL BELOW THE GROUND ELEVATION DOWN SLOPE TO PREVENT RUNOFF FROM BYPASSING THE INLET. EXCAVATION OF A BASIN ADJACENT TO THE DROP INLET OR A TEMPORARY DIKE ON THE DOWN SLOPE OF THE STRUCTURE MAY BE NECESSARY.
4. ALL LOOSE STRAW DEBRIS MUST BE CLEARNED UP ON A REGULAR BASIS

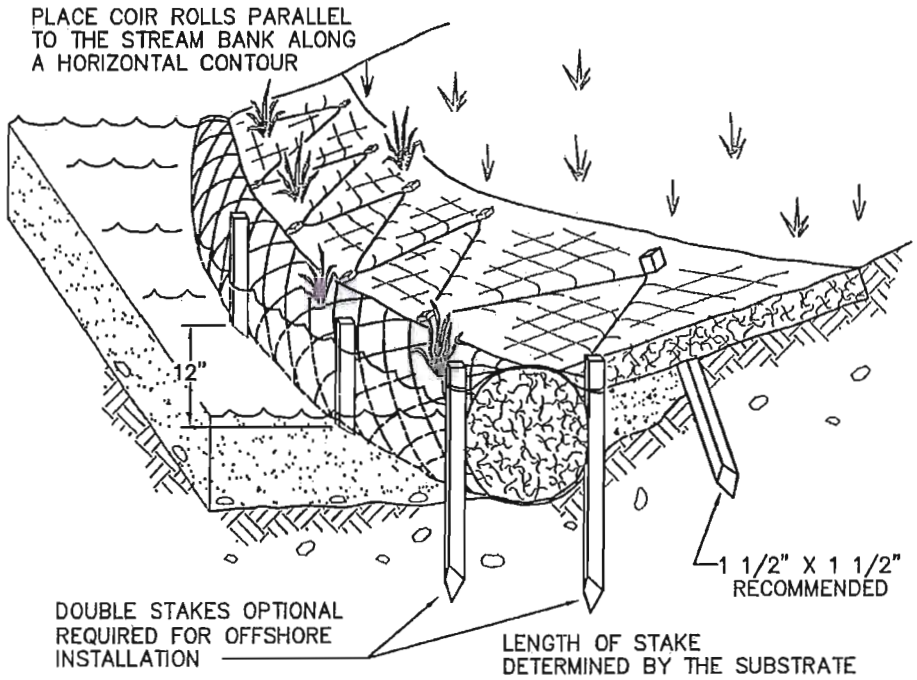

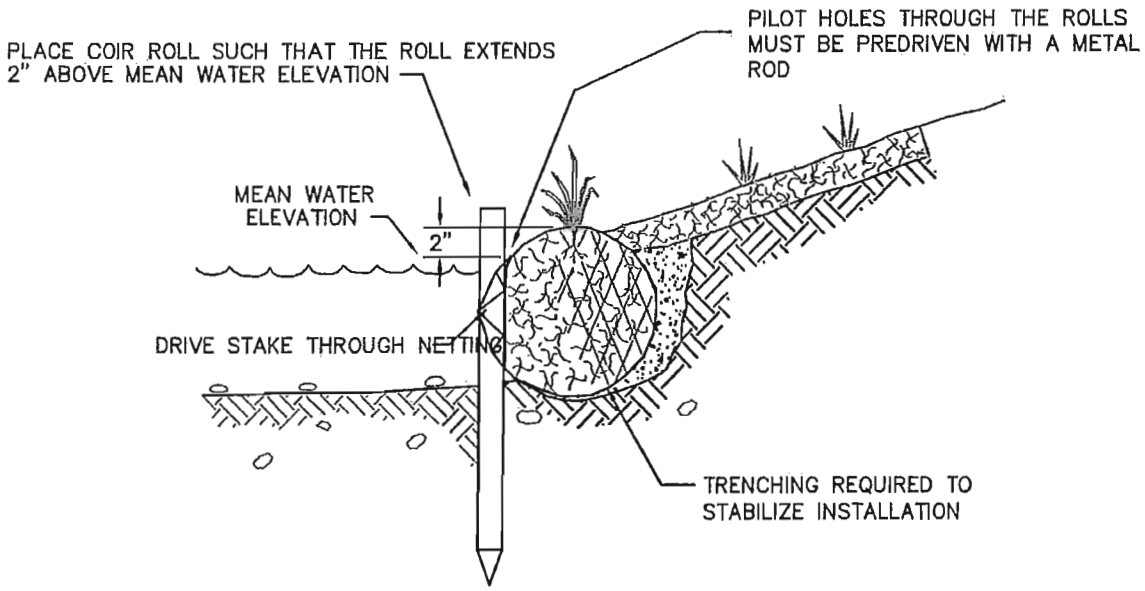

NOT TO SCALE

City of South Jordan, Utah

SOUTH JORDAN	COIR ROLL / COIR MATS	PLAN 5400

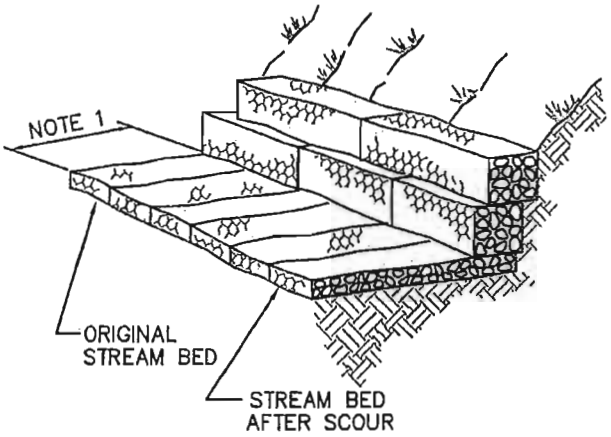

1/2 GABION CHANNEL

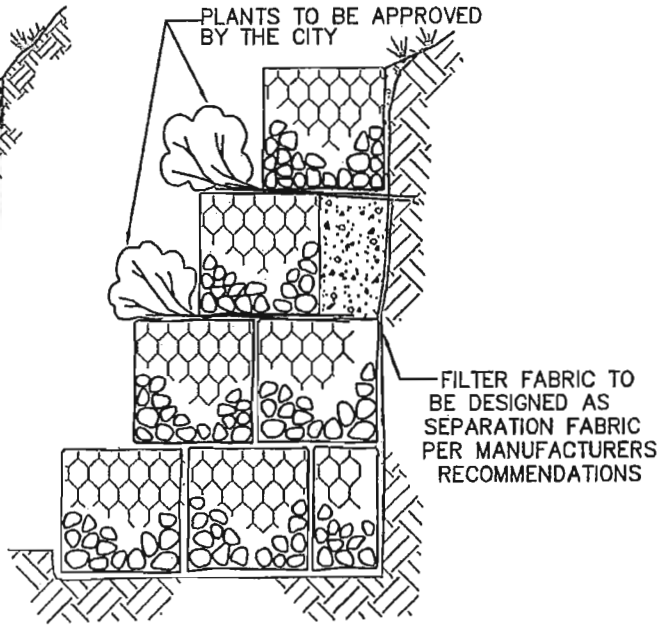

TYPICAL VEGETATED ROCK GABION

TYPICAL GABION AND GABION MATTRESS

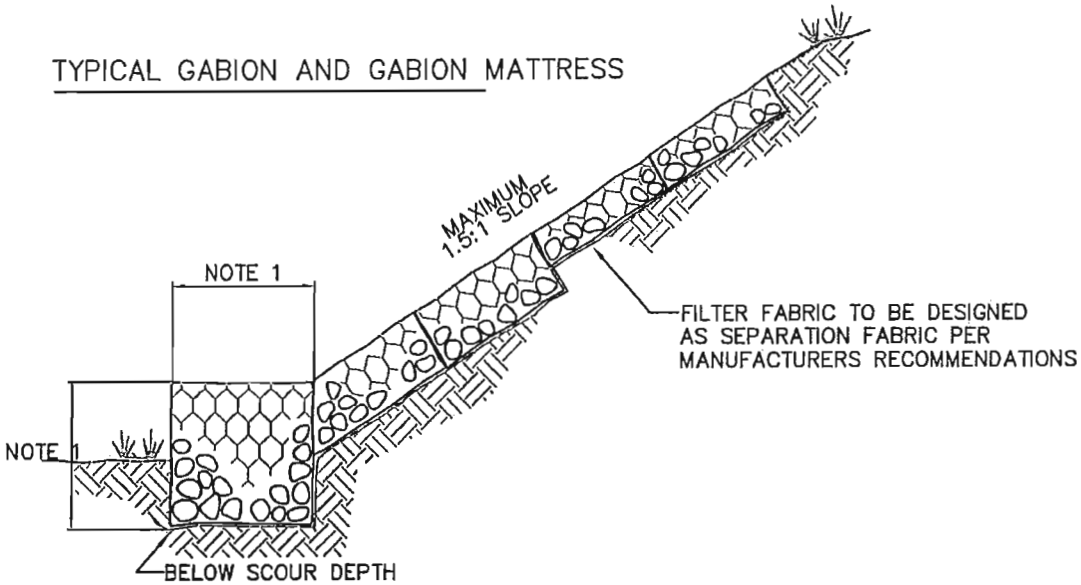

NOTES:

1. TO BE DESIGNED PER H.E.C. 11
2. BASKET FASTENERS & BASKET MATERIAL TO BE APPROVED BY THE CITY

City of South Jordan, Utah

SOUTH JORDAN	GABIONS	PLAN 5405

ORDINANCE NO. 2008-01

AN ORDINANCE AMENDING THE DEVELOPMENT CODE, ADDING SECTION 16.44 OF THE SOUTH JORDAN MUNICIPAL CODE, PERTAINING TO LAND DISTURBANCE.

WHEREAS, the City of South Jordan may enact rules and regulations relating to development of land with in City limits pursuant to Utah Code Ann.§ 10-9a (2007) as the City deems necessary to achieve the purpose of the statute (UCA § 10-9a-102); and

WHEREAS, the City has enacted and published ordinances regulating development that are codified as Title 16 "Development Code" in the South Jordan Municipal Code ("SJMC"); and

WHEREAS, land throughout the City is being developed under the requirements of SJMC Title 16; and

WHEREAS, SJMC Title 16 does not address Land Disturbance or grading requirements for development of property; and

WHEREAS, SJMC Title 16 does not clearly address the requirements and enforcement of the State mandated Utah Pollution Discharge Elimination System (UPDES) ; and

WHEREAS, developers regularly grade and otherwise change the natural grade of the land in a manner that complies with current City standards and regulations but creates complaints from neighbors mainly in infill projects; and

WHEREAS, the South Jordan City Council has found and determined that the proposed addition of Title 16.44 to the South Jordan Municipal Code will support the best interests of the City and will promote the public health, safety, and welfare..

NOW, THEREFORE, BE IT ORDAINED BY THE CITY COUNCIL OF SOUTH JORDAN CITY, UTAH AS FOLLOWS:

SECTION 1. Enactment. Title 16 Chapter 44, "Land Disturbance" is hereby enacted as follows:

CHAPTER 16.44

LAND DISTURBANCE

Sec. 16.44.010 Short Title.
Sec. 16.44.020 Authorization to Adopt Standards.
Sec. 16.44.030 Purpose.
Sec. 16.44.040 Definitions.
Sec. 16.44.050 Administration
Sec. 16.44.060 Conflict.
Sec. 16.44.070 Land Disturbance Permit Required.

Sec. 16.44.080 Exemptions.
Sec. 16.44.090 Application.
Sec. 16.44.100 Plans and Specifications.
Sec. 16.44.110 Required Plans and Reports.
Sec. 16.44.120 Slope Length.
Sec. 16.44.130 Application Waiver.
Sec. 16.44.140 Fees.
Sec. 16.44.150 Review and Approval.
Sec. 16.44.160 Issuance.
Sec. 16.44.170 Conditions of Approval.
Sec. 16.44.180 Denial of Land Disturbance Permits.
Sec. 16.44.190 Approved Plans.
Sec. 16.44.200 Modification of Plans.
Sec. 16.44.210 Correction of Errors.
Sec. 16.44.220 Term of Land Disturbance Permits.
Sec. 16.44.230 Extension of Term.
Sec. 16.44.240 Suspended or Abandoned Work.
Sec. 16.44.250 Renewal of Expired Land Disturbance Permit.
Sec. 16.44.260 Suspension or Revocation of Permit.
Sec. 16.44.270 No Transfer or Assignment of Permit.
Sec. 16.44.280 Validity of Permit.
Sec. 16.44.290 Additional Permits.
Sec. 16.44.300 Emergencies.
Sec. 16.44.310 Compliance With Permit.
Sec. 16.44.320 Protective Devices.
Sec. 16.44.330 Maintenance of Site.
Sec. 16.44.340 Access and Haul Routes.
Sec. 16.44.350 Consent of Adjacent Property Owners.
Sec. 16.44.360 Cuts and Fills.
Sec. 16.44.370 Erosion Control and Drainage Devices.
Sec. 16.44.380 Areas Subject to Slides and Unstable Soils.
Sec. 16.44.390 Planting and Irrigation of Cut and Fill Slopes.
Sec. 16.44.400 Property Line and Corner Markers
Sec. 16.44.410 Reserved
Sec. 16.44.420 Slope Protection Easements.
Sec. 16.44.430 Lots Graded Toward Street for Drainage.
Sec. 16.44.440 Lots Which Cannot be Graded Toward the Street Easements for Drainage.
Sec. 16.44.450 Materials for Side and Rear Yard Drainage.
Sec. 16.44.460 Flow of Water from One Lot to Another Limited Use.
Sec. 16.44.470 Landscaping of Certain Lots for Erosion Control.
Sec. 16.44.480 Erosion Control and Revegetation.
Sec. 16.44.490 Wet Weather Plan.
Sec. 16.44.500 Land Disturbance Design and Construction Standards.
Sec. 16.44.510 Lot Impervious Surface Area Drainage.
Sec. 16.44.520 Land Disturbance Activities and Improvements Bond.
Sec. 16.44.530 Revegetation Bond.
Sec. 16.44.550 Permit Holder Supervision and Inspection.
Sec. 16.44.560 City Inspections.
Sec. 16.44.570 Additional Inspections or Testing.
Sec. 16.44.580 Inspection Requests.
Sec. 16.44.590 Duty to Keep Work Accessible and Exposed.
Sec. 16.44.600 Entry Onto Premises.
Sec. 16.44.610 Certification or Approval.
Sec. 16.44.620 Transfer of Responsibility for Certification.
Sec. 16.44.630 Final Inspection.

Sec. 16.44.640 Building Permits.
Sec. 16.44.650 Validity of Inspection.
Sec. 16.44.660 Enforcement.
Sec. 16.44.670 Violations.
Sec. 16.44.680 Remedies and Enforcement Powers.
Sec. 16.44.690 Notice of Violation.
Sec. 16.44.700 Suspension or Revocation of Land Disturbance Permit.
Sec. 16.44.710 Notice of Suspension or Revocation.
Sec. 16.44.720 Cessation of Work.
Sec. 16.44.730 Decision of Suspension or Revocation.
Sec. 16.44.740 Right of Entry.
Sec. 16.44.750 Appeals.
Sec. 16.44.760 Liability.
Sec. 16.44.770 Right to Stop Work.
Sec. 16.44.780 Parking Lots.

16.44.010 Short Title.

This Chapter is to be known as the "Land Disturbance Ordinance" of the City and may be so
cited.

16.44.020 Authorization to Implement Standards

The City Engineer or designee is hereby authorized to implement these standards pursuant to this Chapter.

16.44.030 Purpose.

The purpose of this Chapter is to establish minimum requirements and procedures for conducting land disturbance activities within the City. It is the intent of this Chapter to protect the health, safety and welfare of the public against inadequate, unwarranted, or unsafe land disturbance activities during all aspects of land disturbance activities, including, but not limited to the following:

(a) To establish processes, procedures and standards for land disturbance activities such as clearing, grubbing, grading, excavating, filling, dredging, and other land disturbance related activities, to minimize hazards to life and limb, protect against erosion and sedimentation, maintain the natural environment, protect the safety, use, and stability of public rights-of-way and drainage facilities, and provide for restoration of the land through re-vegetation and landscaping.

(b) To assure that projects approved under this Chapter, as well as neighboring and downstream properties, will be free from harmful effects of new land disturbance activities with regard to runoff, including inundation, flooding, erosion, air pollution, and sedimentation.

(c) To ensure proper restoration of vegetation and soil systems disturbed by land disturbance activities, to maintain an attractive and healthy landscape, and to control against dust and erosion and their consequent effects on soil structure and air and water quality during and after excavation.

(d) To provide processes and standards in compliance with State and Federal requirements regarding pollution, environmental quality, and storm water discharge.

16.44.040 Definitions.

As used in this Chapter, the following words and phrases shall have the meanings given in this Section:

(a) **Applicant:** Any person who submits an application for a permit pursuant to the Land Disturbance Ordinance.

(b) **Best Management Practice (BMP):** Practices, procedures or designs used as a standard for a given industry. In this specific case, these practices are for the erosion control industry's Best Management Practices (BMP's) for controlling non-point sources of pollution and are the methods, measures, practices, or a combination of practices determined to be the most effective and practicable means (including technological, economic, and institutional considerations) to control non-point pollutants at levels compatible with environmental quality goals. As used in the document, BMP's are synonymous with erosion and sediment control measures.

(c) **Building Envelope:** The area within the lot which will be used to construct the building, landscaped areas, retaining walls, fences, porches, patios, decks, swimming pools, driveways, parking areas, or any other permanent feature which is appurtenant to the building.

(d) **Buttress Fill:** A buttress fill is a designed compacted earth fill used for providing lateral support to an un-stabilized earth or rock mass.

(e) **City:** City of South Jordan, Utah.

(f) **City Engineer:** City Engineer shall mean the City Engineer of City of South Jordan, or the person(s) engaged by the City and authorized to perform the duties assigned to the City Engineer, and shall include any deputies, assistants, and representatives.

(g) **Civil Engineer:** A professional engineer in the branch of civil engineering holding a valid certificate of registration issued by the State of Utah.

(h) **Clearing and Grubbing:** Moving, removing, displacing, and/or stockpiling, by manual or mechanical means, trees, and other vegetation and/or the top organic layer as described in the geotechnical report. In the absence of a geotechnical report the organic layer shall not be greater than eight (8) inches.

(i) **Community Development Director:** That person charged with the responsibility of directing all phases of the Community Development Division and the enforcement of all State statutes and City laws pertaining to this office, or his duly authorized representative.

(j) **Compaction:** The act of compacting or consolidating soil and rock material to a specified density, and the resulting compacted state of the material.

(k) **Detention:** The holding back or delaying of the flow of water, through manmade or natural means.

(l) **Dredging:** The practice of deepening a waterway by mechanical means by the removal of sediments.

(m) **Enforcement Authority:** The City Engineer, the Engineering Inspector, and other designated representatives of the City Engineer, or any duly appointed Code Compliance

Officer or police official charged with the responsibility for enforcement of the provisions of this Chapter.

(n) **Engineering Geologist:** A professional engineering geologist licensed or registered under the laws of Utah and capable of applying the geological sciences to engineering practices for the purpose of assuring that the geological features affecting the location, design, construction, operation, and maintenance of engineering works are recognized and adequately provided for.

(o) **Erosion:** The process of detachment of soil particles or other surface material by the action of wind, water, snow, or ice.

(p) **Erosion Control Measures:** The structural and nonstructural Best Management Practices (BMP's) for erosion control that prevents displacement of soil particles by wind or water. BMP Erosion control measures may include seeding, mulching, vegetative buffer strips, sod, plastic coverings, rip rap, gabions, other channel armoring methods, burlap coverings, watering, and other BMP measures that control the movement of the ground surface or soil.

(q) **Farming and Agricultural Operations:** Any activity or process normally performed as part of the farming use of the land which would prepare the soil for planting or harvesting of agriculturally usable products.

(r) **Fill:** Deposits of soil, rock, or other materials placed by man.

(s) **Finished Grade:** The final grade or elevation of the building site, slope or terrace (0.1 plus or minus feet).

(t) **Grade:** The elevation of the ground surface as measured from a known vertical control. Existing grade means grade currently on the site. Natural grade means the grade unaltered evidenced by the presence of indigenous plants and grasses.

(u) **Grading:** The act or result of digging, excavating, transporting, spreading, depositing, filling, compacting, settling, or shaping of land surfaces and slopes, and other operations or activities involving the physical movement of rock or soil.

(v) **LDDCS:** Land Disturbance Design and Construction Standards.

(w) **Land Disturbance:** Any disturbance of native soils, plants, or environment, including, but not limited to, clearing, grubbing, grading, excavation, filling, dredging, construction of earth-filled dams, and any other types of earthwork.

(x) **Land Disturbance Design and Construction Standards:** City of South Jordan Land Disturbance Design and Construction Standards as adopted by the City. Abbreviated herein as LDDCS.

(y) **Land Disturbance Permit:** The land disturbance permit required by the City in accordance with provisions of this Chapter.

(z) **Landmark Trees:** Trees that measure over three inch (3) caliper.

(aa) **Landscape Architect:** A professional landscape architect licensed or registered under the laws of Utah.

(bb) **Lot Level:** Design, construction and infrastructure related to construction on a specific lot within an approved subdivision or site plan development.

(cc) **Planting Date:** The date native seed can be applied without temporary irrigation, generally from October 15 through March 1, or as otherwise determined by the City's Engineering Division.

(dd) **Project:** A defined site that has obtained final subdivision plat or site plan approval from the City.

(ee) **Sediment:** The transport of soil or earth material by wind, water, snow or ice.

(ff) **Sediment Control Measures:** The structural and nonstructural BMP that contains the deposited, displaced soil particles caused by erosion. This may include (but not limited to) dikes, sediment detention traps, sediment detention basins, filters, fences, barriers, swales, berms, drains, check dams, and other measures that control the deposition of soil or earth material.

(gg) **Site:** A parcel or parcels of real property owed by one or more persons on which activity regulated by this Chapter is occurring or is proposed to occur.

(hh) **Slope:** A portion of ground forming a natural or artificial incline, including retaining wall.

(ii) **Soil:** All earth material, of whatever origin, which overlies bedrock.

(jj) **Soils Engineer:** A professional civil engineer licensed under the laws of Utah who is experienced in soil mechanics and slope stability analysis.

(kk) **Structure:** Anything constructed or erected which requires location on the ground or is attached to something having location on the ground.

(ll) **Subdivision Level:** Design, construction and infrastructure related to subdivision development and systems such as drainage, culinary water, wastewater systems, etc.

(mm) **Swales:** Shallow grassed or otherwise protected trenches that are wider than they are deep that provide a specific pathway for drainage water.

(nn) **Wet Weather Plan:** A detailed erosion and sediment control plan and construction sequence that clearly shows how construction will be processed during the period of October 31 of each year until March 31 of each year.

16.44.050 Administration.

The Engineering Division is designated as the responsible division, with the City Engineer as the official responsible for the administration of this Chapter. The City Engineer may delegate any or all administrative duties provided herein as deemed necessary.

16.44.060 Conflict.

In the event of a conflict between the terms of this Chapter or any other law, ordinance or rule, the more restrictive provision shall apply.

16.44.070 Land Disturbance Permit Required.

No person, developer, builder, contractor, or other entity in any Land Use Zone except for Planned Community Zone shall cause to be commenced or perform any land disturbance,

grading, relocation of earth, or any other land disturbance activity, and no person shall import or export any earth materials to or from any site, without first obtaining a land disturbance permit. No land disturbance permit shall be issued for any site or project requiring site plan approval until and unless a final site plan has been approved by the City Engineer, for the site or project, and no land disturbance permit shall be issued for any site or project requiring subdivision approval until and unless the final subdivision plat has been approved by the City Engineer for the site or project. City Engineer or designee may waive the requirement of obtaining final site plan or final subdivision plat approval as is deemed appropriate for a particular project. City Engineer may require a letter of indemnification as part of that approval

No person, developer, builder, contractor in a Planned Community Zone shall cause to be commenced or commence land disturbance, grading, relocation, or any other land disturbance activity and no person shall import or export any earth materials to or from any site or within the site, without first obtaining a land disturbance permit. No land disturbance permit shall be issued for any site or project within a Planned Community Zone without City approved land disturbance or grading plans.

16.44.080 Exemptions.

The following activities do not require a land disturbance permit. Activities exempted from the land disturbance permit requirements set forth herein are subject to and shall be performed in accordance with the Land Disturbance Design and Construction Standards, and all other applicable ordinances, rules, regulations, standards and specifications of the City.

(a) An excavation which does not exceed fifty (50) cubic yards; or affects an area that is less than three-thousand (3,000) square feet; or does not create a cut slope greater than five feet (5) in height or steeper than two horizontal to one vertical (2:1); provided, however, any excavation which is made in an area of adverse geological conditions or which alters a drainage course must obtain a permit.

(b) A fill which is less than one foot (1) in depth and placed on natural terrain with a slope flatter than five horizontal to one vertical (5:1); affects an area that is less than three-thousand (3,000) square feet; is less than three feet (3) in depth and is not intended to support structures; provided, any fill over fifty (50) cubic yards or which affects a drainage course must obtain a permit.

(c) Excavations below the finished grade for basements and footings of buildings, retaining walls, swimming pools, or other structures authorized by a valid building permit. This shall not exempt any fill made of materials from such excavations or exempt any excavation having an unsupported height greater than five feet (5) after the completion of such structures.

(d) Mining and quarrying operations conducted under a valid special use permit issued by the City pursuant to applicable zoning regulations.

(e) The depositing of rubbish or other materials at any dump or sanitary fill conducted under a valid permit and/or applicable zoning ordinances. Such exemption shall not extend to surrounding berms, permanent access roads, building sites, or protective drainage works.

(f) Farming, agricultural operations, and residential gardening conducted under a valid use permit or applicable zoning ordinances.

(g) Soil and water conservation work under the direct control of the United States Natural Resources Conservation Service; provided, the construction of water impounding structures of earth shall require a permit where the maximum depth to which water is or may be impounded is five feet (5) or greater.

(h) Grading operations conducted by the City for approved capital improvement projects.

(i) Exploratory Work made in preparation of completing a Geological and or Soils report.

16.44.090 Application.

Application for a land disturbance permit shall be filed with the City Engineer on forms furnished by the City for such purpose. Applications shall include all the plans, specifications, reports, documentation and information required herein. Three (3) sets of all required plans, specifications and reports shall be submitted with each application. All such plans, specifications and reports shall be prepared and signed by a civil engineer, soils engineer, engineering geologist and/or landscape architect, as required by this Chapter and the LDDCS. Additional experts in applicable field should be utilized for preparation of such documents and reports as appropriate. No application shall be processed until all required plans, specifications, reports, documentation and information have been received by the City in accordance with the provisions and requirements of this Chapter.

16.44.100 Plans and Specifications.

Each application for a land disturbance permit shall include the following plans, specifications, reports, documentation and information:

(a) A vicinity sketch or other data adequately indicating the site location;

(b) The property lines and dimensions and bearings of the property on which the work is to be performed;

(c) The location of any existing buildings or structures on the property where the work is to be performed and the location of any building or structure on the land of adjacent property owners, which building or structure is within fifty feet (50) of the property boundary;

(d) The location of landmark trees as indicated by the designation of the location of the center of the trunk;

(e) Accurate topography showing suitable contours of the existing and proposed ground elevations. The contours shall be extended past the boundary lines of any project for a minimum of one hundred feet (100). The City Engineer may require the contours to be extended to include watershed areas and all other areas influencing the proposed project or site

(f) The elevations, dimensions, locations, extent, and slopes of all proposed land disturbance activities shown by contours or other means;

(g) A certification, by a soils engineer, of the quantity and type of material of any proposed excavation and fill;

(h) The estimated starting and completion dates for the proposed land disturbance activities and proposed land disturbance activities schedule and permit term;

(i) Detailed plans of all drainage devices, walls, cribbing, dams, or other protective devices to be constructed in connection with, or as a part of, the proposed work, together with a map showing the drainage area and estimated runoff of the area served by the drains. All hydrologic and hydraulic calculations shall be signed by a civil engineer;

(j) Temporary construction entrance and exit plan as indicated in the LDDCS;

(k) An indication as to the type of structure(s) to be constructed or the proposed use of the site, such as single -family residence, multiple -family development, commercial, or industrial; and

(l) Any additional plans, drawings, or calculations required herein or by the City Engineer.

16.44.110 Required Plans and Reports.

Unless an application waiver is obtained in accordance with the provisions of this Chapter, each application for a land disturbance permit shall include the following plans and reports for the proposed land disturbance activity and site. The grading plan shall be prepared in accordance with the requirements and standards for such plans as set forth in the Land Disturbance Design and Construction Standards.

(a) Grading plan prepared and signed by a civil engineer

(b) Drainage Plan -Each application for a land disturbance permit shall include a drainage plan for the proposed land disturbance activity and site. The drainage plan shall be prepared by a civil engineer and shall be prepared in accordance with the requirements and standards for such plans as set forth in the LDDCS.

(c) Rear and Side Lot Drainage Swales. Swales located in rear and side yards shall part of the grading and drainage plan and be designed as set forth in the LDDCS.

(d) Erosion and Sediment Control Plan -Each application for a land disturbance permit shall include an erosion and sediment control plan for the proposed land disturbance activity and site. The erosion and sediment control plan shall be prepared by a civil engineer and shall be prepared in accordance with the requirements and standards for such plans as set forth in the LDDCS.

(e) Re-vegetation Plan -Each application for a land disturbance permit shall include a re-vegetation plan for the proposed land disturbance activity and site. The re-vegetation plan shall be prepared by an erosion control specialist or professional of comparable expertise and shall be prepared in accordance with the requirements and standards for such plans as set forth in the LDDCS, Section 4.

(f) Soils Report - Each application for a land disturbance permit shall include a soils report for the site. The soils report be prepared and signed by a soils engineer and shall be prepared in accordance with the requirements and standards for geological reports as set forth in the LDDCS, Section 2

(g) Geological Report - When deemed necessary by the City Engineer due to the circumstances and conditions of the site, an application for a land disturbance permit shall include a geological report for the site. The geological report, when required, shall be

prepared and signed by a engineering geologist and shall be prepared in accordance with the requirements and standards for geological reports as set forth in the LDDCS, Section 2.

(h) Exploratory Work -Surface and subsurface exploratory work and reports may be required when deemed necessary by the City Engineer due to site conditions and/or hazards on the site. When required, such exploratory work and reports shall be performed and prepared by a soils engineer and/or engineering geologist.

16.44.120 Slope Length.

All applications for land disturbance activities involving or proposing cut and/or fill slopes shall include a report prepared and signed by an erosion control specialist or professional of comparable expertise (i.e. Professional Civil Engineer, Landscape Architect, etc.) addressing the design, safety, stability of the proposed slope lengths. Such report shall indicate how the applicant will address the issue of length of slope using the Revised Uniform Soils Loss Equation (RUSLE). The report shall indicate the method and/or materials to be used.

16.44.130 Application Waiver.

The City Engineer may waive any application requirement, plan, specification or report when deemed unnecessary for the proposed application and for good cause showing. A request for an application waiver shall be submitted by the applicant in writing setting forth the grounds and reasons for the waiver. An application shall not be deemed complete for purposes of the filing of a completed application until the City Engineer has approved the application waiver request. Failure of the City Engineer to approve the request within 60 days shall be deemed a denial.

16.44.140 Fees.

All applicable fees shall be paid by applicant with the filing of an application for a land disturbance permit. An application will not be deemed complete until the required fees have been received by the City. The fee amount shall be as adopted by City Council.

16.44.150 Review and Approval.

The City Engineer shall review the application, plans, and specifications, reports, documentation and information filed by an applicant for a land disturbance permit. If the City Engineer determines that the application is incomplete, or that additional information is needed from the applicant regarding the proposed land disturbance activities, the City Engineer shall notify the applicant in writing of such deficiencies or the need for additional information. The City Engineer may also request review of the application, plans and specifications by other departments and divisions of the City for compliance with the laws and ordinances under their jurisdiction.

Once satisfied that the work described in an application for land disturbance permit and the plans and specifications filed with the application conform to the requirements of this Chapter and other pertinent laws and ordinances, all applicable fees have been paid, and all required bonds have been provided in accordance with the provisions of this Chapter, the City Engineer may issue a land disturbance permit to the applicant.

16.44.160 Issuance.

The City Engineer shall provide the applicant with a written decision, within 30 days, regarding the approval or denial of the application for land disturbance permit and related plans and shall provide the applicant with a copy of such decision. If the application is approved, a copy of the land disturbance permit will be provided to the applicant.

16.44.170 Conditions of Approval.

In granting any land disturbance permit pursuant to the provisions of this Chapter, the City Engineer or his or her authorized representative may attach such conditions as may be reasonably necessary to protect public health and safety. Such conditions may include, but will not be limited to:

(a) The improvement of any existing site condition to conform with the standards of this Chapter; and
(b) Requirements for fencing excavations or fills which would otherwise be hazardous, and
(c) Requirements for access and haul routes. The City Engineer may impose conditions to the land disturbance permit with respect to access or haul routes to and from land disturbance activity sites, the hours of work, methods of controlling dust, and safety precautions involving pedestrian or vehicular traffic as determined required in the interest of the public health, safety and welfare.

16.44.180 Denial of Land Disturbance Permits.

(a) A land disturbance permit shall not be issued in any case where it is determined by the City Engineer that the work proposed by the applicant is hazardous, or is likely to endanger any private property, result in the deposit of debris on any public way, or interfere with any existing drainage course.

(b) A land disturbance permit shall not be issued if the land area for which grading is proposed is subject to geological or flood hazard to the extent that no reasonable amount of corrective work can eliminate or sufficiently reduce the hazard to human life or property as determined by the City Engineer.

(c) A land disturbance permit shall not be issued if the proposed land disturbance activity would not comply with the requirements of an approved site plan, subdivision plat, or any provisions of law, including the provisions of this Chapter.

16.44.190 Approved Plans

Prior to issuance of the land disturbance permit, the applicant shall provide the City with three (3) sets of the final plans, specifications and computations (full-size) and two (2) sets of 11x17-inch plans. Upon issuance of the land disturbance permit, the City Engineer shall endorse in writing, or stamp Approved for Construction on all required sets of plans and specifications. The City Engineer shall retain two (2) sets of the plans and specifications during the period of construction and as thereafter required by the Government Records Access and Management Act (GRAMA). Upon Approval, the City Engineer shall return one set of the final plans and specifications, stamped Approved, to the applicant. The applicant shall retain the approved set of plans and specifications at the site covered by the land disturbance permit at all times during which the work authorized thereby is in progress.

16.44.200 Modification of Plans.

No approved grading/Land Disturbance plans or specifications shall be changed, modified, altered or amended, without approval of the City Engineer in accordance with the procedures and requirements set forth herein for original approval of such plans and specifications. Modification of plans will require additional City review and will be subject to additional fees.

16.44.210 Correction of Errors.

The issuance of a land disturbance permit based upon submitted plans, specifications and documents shall not prevent or preclude the right of the City from thereafter requiring the correction of errors which may be later discovered in such plans, specifications and documents.

16.44.220 Term of Land Disturbance Permits.

Each land disturbance permit shall contain a specified term as determined by the City. The date the land disturbance permit expires shall be noted on the land disturbance permit. No person shall perform land disturbance, grading, relocation of earth, or any other land disturbance activity beyond the expiration date, unless an extension of term is granted or a new land disturbance permit is obtained in accordance with this Chapter.

16.44.230 Extension of Term.

Prior to expiration of the land disturbance permit, the land disturbance permit holder may apply for an extension of time in which to complete the work in a reasonable and expeditious manner. The City Engineer may grant an extension of time, upon a showing of good cause, for a period or periods not exceeding a total of one (1) year. Denial of an extension of time does not preclude the right of the land disturbance permit holder to apply for a new land disturbance permit for the remaining balance of the work. Adequate security or written consent from the surety must be provided for any extension of time before approval of the extension is granted or becomes effective. If the extension is denied, the Cit y will make a demand on the bond and complete the work.

16.44.240 Suspended or Abandoned Work.

Every land disturbance permit issued by the City Engineer under the provisions of this Chapter expires by limitation and becomes null and void if the land disturbance permit holder suspends or abandons the construction or work authorized by such land disturbance permit, at any time after the work is commenced, for a period of thirty days (30) or longer. After construction or work under a land disturbance permit has been suspended or abandoned for a period of thirty (30) days or longer, a new or renewed permit must be obtained prior to recommencing work.

16.44.250 Renewal of Expired Land Disturbance Permit.

If a land disturbance permit has expired, a new land disturbance permit shall be obtained before any work can be recommenced. If no changes have been made or will be made to the original plans and specifications for such work, and any suspension or abandonment has not exceeded one (1) year, the fee for the new land disturbance permit will be one-half the amount ordinarily required for a new land disturbance permit. If changes have been made or will be made in the original plans or specifications for the land disturbance activity, or the suspension or abandonment has exceeded one (1) year, the fee for a new permit shall be required for a new permit for the proposed land disturbance activity.

16.44.260 Suspension or Revocation of Permit.

The City may, in writing, suspend or revoke a permit when the permit is issued in error, or on the basis of incorrect information supplied, or when work conducted there under is in violation of the terms of the permit or the provisions of this Chapter or other applicable City Ordinances, rules, regulations, standards and specifications, or pertinent laws.

16.44.270 No Transfer or Assignment of Permit.

Land disturbance permits shall not be transferable or assignable and work shall not be performed under a land disturbance permit in any place other than that specified in the permit. Nothing herein shall prevent a permit holder from subcontracting the work to be performed under a land disturbance permit; provided, however, the permit holder shall be and remain responsible and liable for the performance of the work and land disturbance activities under the permit and for all bonding and other requirements of this Chapter and the applicable permit.

16.44.280 Validity of Permit.

The issuance of a land disturbance permit shall not be construed to be a permit for violation of any of the provisions of this Chapter or any other City Ordinances, rules, regulations, standards or specifications or other pertinent laws. Permits presuming to give such authority shall be deemed invalid.

16.44.290 Additional Permits.

The issuance of a land disturbance permit shall not relieve the owner, applicant, permit holder, or developer from obtaining any and all other permits or approvals required by the City or any other applicable agency having jurisdiction over the work or property affected by the proposed land disturbance activity.

16.44.300 Emergencies.

The provisions of this Chapter shall not apply to any land disturbance activity which is conducted during a period of emergency or disaster, as declared and defined by the City, and which is directly connected with or related to the relief of conditions caused by such emergency or disaster.

16.44.310 Compliance With Permit.

The land disturbance permit holder and contractor and their agents shall carry out the proposed land disturbance activities in accordance with the approved plans and specifications, the conditions of the land disturbance permit, and the requirements of this Chapter and all other applicable ordinances, rules, regulations and standards of the City.

16.44.320 Protective Devices.

The land disturbance permit holder and contractor and their agents shall maintain all required protective devices and temporary drainage during the progress of the land disturbance activities and shall be responsible for the observance of the hours of work, mud tracking, dust control, methods of hauling, and other applicable regulations.

16.44.330 Maintenance of Site.

The land disturbance permit holder and contractor and their agents shall be responsible for the maintenance of the site and the removal of all debris during the term of the permit.

16.44.340 Access and Haul Routes.

Temporary construction entrance and exit routes shall be provided by the permit holder in accordance with the approved plans and permit access at key points to the site or project to eliminate the problem of tracking mud and debris from the construction site onto private or public streets.

16.44.350 Consent of Adjacent Property Owners.

Whenever any land disturbance activity requires entry onto adjacent property for any reason, the land disturbance permit applicant shall obtain the written consent of the adjacent property owner or their authorized representative and shall file a copy of such consent with the City Engineer before a land disturbance permit may be issued.

16.44.360 Cuts and Fills.

(a) Height. Except as otherwise provided herein, no finished fill slope shall exceed a vertical height of twenty-five feet (25). The City Engineer may approve a fill slope in excess of twenty-five feet (25) as deemed appropriate in his or her sole discretion based upon the circumstances and conditions of the proposed site and fill. Any fill slope proposed in excess of twenty-five feet (25) shall be supported by documentation and a report prepared and signed by a professional engineering geologist and soils engineer attesting to the appropriateness, safety and stability of the proposed fill slope. Such documentation and report shall be prepared at the applicants expense and shall address the need for and design of necessary measures to provide for the safety and stability of the proposed slope in accordance with the LDDCS.

(b) Slope. Except as otherwise provided herein, no cut or fill shall exceed a slope of two horizontal to one vertical (2:1). The City Engineer may approve a cut or fill slope in excess of two horizontal to one vertical (2:1) as deemed appropriate in his or her sole discretion based upon the circumstances and conditions of the proposed site and the cut or fill in accordance with the LDDCS. Any cut or fill slope proposed in excess of two horizontal to one vertical (2:1) shall be supported by documentation and a report prepared and signed by a professional engineering geologist and soils engineer attesting to the appropriateness, safety and stability of the proposed cut or fill slope. Such documentation and report shall be prepared at the applicants expense and shall address the need for and design of necessary measures to provide for the safety and stability of the proposed cut or fill slope.

(c) Unstable Material. The City Engineer may require any cut or fill to be constructed with an exposed surface flatter than two horizontal to one vertical (2:1) when, in the City Engineers discretion, under the particular conditions, such flatter surface is deemed necessary for stability or safety.

(d) Fill Slope Limits. Toes of fill slopes shall not be made nearer to a property boundary line than one-half (1/2) of the height of the fill, or twenty feet (20), whichever is less. Fill slopes shall not be divided horizontally by property lines. Fill slopes occurring on a side or rear lot line shall be made a part of the downhill lot.

(e) Intervening Terraces. When intervening terraces are used, terraces shall be paved using materials as approved by the City and shall have a minimum width of six feet (6).

Terraces shall be extensively landscaped in accordance with an approved landscaping plan. Terraces shall be spaced at vertical intervals of twenty-five feet (25); provided, however, for slopes less than forty feet (40') in vertical height, terraces shall be approximately at mid-height. For slopes flatter than two horizontal to one vertical (2:1), or where soil conditions require, additional intervening terraces may be required.

(f) Compaction. All fills shall be placed, compacted, inspected, and tested in accordance with the provisions of this Chapter and the Land Disturbance Design and Construction Standards. If the strict enforcement of the compaction provisions of this Section is determined by the City Engineer to be unnecessary because of the proposed or probable use of the land, the City Engineer may waive the requirements. The requirements of this Section shall not be waived when structures are to be supported by the fill, the fills are being placed in areas to be designated as hillside, or where the fills are necessary as a safety measure to aid in preventing the saturation, settling, slipping, or erosion of the fill.

(g) Fills Toeing Out on Natural Slopes. Except as otherwise provided herein, no fills toeing out on natural slopes, which are steeper than two horizontal to one vertical (2:1) shall be permitted. The City Engineer may approve such fills toeing out on natural slopes which are steeper than two horizontal to one vertical (2:1) as deemed appropriate in his or her sole discretion based upon the circumstances and conditions of the proposed site and fill. Any fill slope proposed to toe out on natural slopes which are steeper than two horizontal to one vertical (2:1) shall be supported by documentation and a report prepared and signed by a professional engineering geologist and soils engineer attesting to the appropriateness, safety and stability of the proposed fill. Such documentation and report shall be prepared at the applicants expense and shall address the need for and design of necessary measures to provide for the safety and stability of the proposed fill.

(h) Combined Cut and Fill Slopes. Combined cut and fill slopes shall meet the requirements of this section insofar as steepness, height, and terracing are concerned except that, where the slope exceeds twenty-five feet (25') in height, the required drainage bench shall be placed at the top of the cut slope.

(i) Setback. Fill placed on or above the top of an existing or proposed cut or natural slope steeper than three horizontal to one vertical (3:1) shall be set back from the top of the slope a minimum distance as required by the International Building Code, as adopted by the City, or such greater distance as approved by the City Engineer based upon submitted reports and documentation for the project.

(j) Existing Fills. All existing man-made fills on any and all sites shall be properly evaluated by a soils engineer. If deficiencies exist, recommendations and design criteria for corrective measures shall be included within the soils engineering report.

(k) Measure of Settlement. The City Engineer or the Building Official may require the determination of the settlement characteristics of any fills to establish that any movements have substantially ceased. In such cases, a system of bench marks shall be installed by a civil engineer or land surveyor at critical points on the fill, and accurate measurements of both horizontal and vertical movements shall be taken and evaluated by the soils engineer for a period of time sufficient to define the settlement behavior. The evaluation period shall be monitored in accordance with the approved geotechnical report for the project.

(l) Buttress Fills. All buttress fills shall be designed in accordance with the Land Disturbance Design and Construction Standards and the recommendations and design criteria, including the sub-drain system, submitted by the soils engineer or engineering geologist with the approval of the City Engineer.

16.44.370 Erosion Control and Drainage Devices.

BMP's, such as, but not limited to, intervening terraces, diverter terraces, "v" channels, runoff computations, drainage dispersal walls, sub-drains and site drainage, are to be provided and designed as indicated in the LDDCS.

16.44.380 Areas Subject to Slides and Unstable Soil.

A detailed evaluation shall be completed for all areas subject to slides or unstable soils by a soils engineer and/or engineering geologist including design criteria for corrective measures. Exploratory work and/or reports may be required by the City Engineer for such conditions in accordance with permit requirements set forth in Chapter 2 of this Chapter.

16.44.390 Planting and Irrigation of Cut and Fill Slopes.

All manufactured cut and fill slopes shall be planted and maintained until established. Temporary irrigation may be required in accordance with the provisions of this Chapter and the LDDCS. The permit holder is responsible for operating and maintaining the irrigation system.

16.44.400 Property Line and Corner Markers.

The permit holder shall ensure that property lines and corner survey markers are installed for the site or project. These markers are to include rebar placed at the back corners of each lot and markers placed on the curb for locating the side property lines. If curb and gutter do not exist, the front markers are to be placed in the road pavement.

16.44.410 Reserved

16.44.420 Slope Protection Easements.

The permit holder shall provide slope protection easements for all slopes constructed as part of the project. Slope protection easements shall be provided either through indicating them on the final plat or by separate recordable easement acceptable to the City.

16.44.430 Lots Graded Toward Street for Drainage.

Except as otherwise provided herein, storm water runoff from individual lots shall be directed toward the streets. Exceptions may be granted by the City Engineer, when deemed appropriate and necessary, in accordance with the provisions of this Section. Aesthetics reasons such as the creation of view lots shall not constitute sufficient reason for granting an exception. If the permit holder finds that draining storm water toward the street is unobtainable, for a portion or all of the lot, the permit holder shall demonstrate to the City Engineer that there are no other avenues for drainage of the storm water. In such cases, the permit holder shall prepare a drainage plan which indicates how the storm water will be disposed of from the lot, to either a City owned storm drain, a natural stream or channel, a manmade channel, other City-approved facility or retained on-site. The permit holder is responsible for obtaining the necessary approvals and permits for the discharge or retention of storm water flows. The City Engineer will determine if such alternate drainage is both necessary and appropriate.

16.44.440 Lots Which Cannot Be Graded Toward the Street.

(a) Approval Required. Lots that cannot be drained toward the street may be allowed to drain a portion of their storm water runoff toward the rear of the yard, after review and approval by the City Engineer. Prior to obtaining this approval, the permit

holder shall prepare a drainage plan, which indicates how the storm water will be disposed of from the lot, to either a City owned storm drain, a natural stream or channel, or manmade channel, or other City approved facility or retained on-site. Such disposal is to be protected by a drainage easement dedicated for this purpose, and the facilities shall be subject to the bonding provisions set forth in Chapter 16.

(b) Swales. Swales located in rear and side yards shall be of materials as approved by the City that will prevent erosion, and shall be a permanent feature of the lot and shall be shown in a drainage easement on the site plan or final plat for the project. An actual design drawing of the swale system shall be prepared and be included as part of the grading and drainage plan for the project. If slopes exist between lots sufficient space shall be allowed to include a swale at the top of the slope and one at the bottom, all within dedicated storm drainage easements. Where storm water is transferred from a lot of higher elevation, to a lower lot in elevation, sufficient energy dissipation shall be constructed to reduce the water velocity to an acceptable level. Engineering calculations are to be submitted to the Engineering Division certifying the proposed design of the energy dissipation facilities as set forth in the LDDCS.

(c) Notice. Swales shall be constructed and in place before building permits are issued on subdivision lots. The developer shall notify the homebuilders and homeowners shall be notified of these drainage swale easements and the need to maintain them both during and after construction. Homeowners are to be notified by the developer of the installation of these side and rear yard swales through an acceptable instrument to the City. A notice of these drainage swale easements shall also be recorded on the subdivision plat for the project. After completion of the swales, the homeowners shall be responsible for maintenance of swales.

(d) Bonding. In the event these types of swales are used for the project, the Developer shall provide sufficient bonding of these swales as part of the City's regular public improvement bonding, to ensure these facilities will be constructed.

(e) Underground Facilities. The Developer may select the option of designing and constructing underground drainage facilities to replace aboveground drainage swales if these facilities meet certain City requirements. These requirements include the design being approved by the Engineering Division, inclusion of these facilities within City approved drainage easements, maintenance of the system by a Homeowners Association, and other requirements as may be deemed necessary by the City.

16.44.450 Materials for Side and Rear Yard Drainage.

Side and rear yard swales and drainage facilities shall be designed into projects as an integral component of the storm water system of the project which needs to transfer storm water runoff from the rear and side yards to the street, or to other rear yard storm water facilities. These swales or drain facilities shall be designed and constructed in such a way that they become a permanent feature of the side and/or rear yard and shall be constructed of a material as approved by the City which prevents erosion. Inspections of these swales or drain facilities shall be conducted during the subdivision construction phase of the project and during lot level development. Developers are to provide recorded drainage easements wide enough to provide for the possible slight field relocation of rear and side yard drainage swales, or other drainage facilities. At a minimum, the drainage easement shall be for the width of the swale plus two feet (2).

16.44.460 Flow of Water from One Lot to Another Limited Use.

In the case where storm water flow is allowed to flow from a higher lot to a lower lot, in

elevation, sufficient energy dissipation shall be designed and constructed to reduce the water velocity to an acceptable level to prevent erosion. The design and construction of these energy dissipation structures shall be approved by the Engineering Division in conjunction with the review and approval of the drainage plan for the project.

16.44.470 Landscaping of Certain Lots for Erosion Control.

The City reserves the right to require that the lots be re-vegetated or stabilized prior to issuance of building permits or that lots be fully landscaped prior to the issuance of a Certificate of Occupancy, as part of the requirements of the project. The purpose of this requirement is to ensure that, for certain areas in the City, which have soils susceptible to severe erosion, that erosion is controlled. The criteria to be used by the City are the size of the lot and sizes of adjacent lots, elevation differences between lots, and the type of soils in the project, along with other factors. A landscaping plan shall be submitted to the Engineering Division for approval prior to commencement of landscaping improvements required hereunder.

16.44.480 Erosion Control and Revegetation.

The developer is to indicate erosion control and re-vegetation BMP's to be used for the project on the project drawings and as part of the project descriptions included with the application in accordance with the City's LDDCS. Erosion and sedimentation control measures will be inspected upon completion, during construction of the subdivision, and once the subdivision construction is complete. The Engineering Division will be responsible for these inspections. Once the subdivision level construction is complete and improvement work begins on individual lots, erosion and sedimentation control BMP will be inspected prior to any disturbance, during construction and once lot level construction is complete. The Building Division will be responsible for these inspections.

16.44.490 Wet Weather Plan.

The City Engineer may require that land disturbance activities and erosion control or re-vegetation plans be modified, if unforeseen delays occur due to weather generated problems not considered at the time the land disturbance permit was issued, including submission and approval of a wet weather plan.

16.44.500 Land Disturbance Design and Construction Standards.

All land disturbance activities shall be conducted in accordance with the Land Disturbance Design and Construction Standards, the Development Processing Manual, Road Design and Construction Standards, Storm Drainage and Flood Control Design and Construction Standards, Culinary Water Design and Construction Standards and all other applicable ordinances, rules, regulations, standards and specifications of the City.

16.44.510 Lot Impervious Surface Area Drainage.

All impervious surface areas on lots, including roofs and their drains, driveway pads and other such areas, are to be drained toward the street unless otherwise approved by the City Engineer.

16.44.520 Land Disturbance Activities and Improvements Bond.

Prior to issuance of a land disturbance permit, the applicant shall be required to enter into a bond agreement in a form acceptable to the City providing security to insure completion of the land disturbance activities and improvements required to be installed and/or provided pursuant to the provisions of this Chapter and the land disturbance permit. The applicant shall be required to complete all land disturbance activities and improvements in accordance with the terms and conditions of the land disturbance permit, the bond agreement, and all applicable ordinances, resolutions, standards, specifications, and plans. The bond shall be equal to 100% of the engineers estimated cost, and approved by the City Engineer, of the land disturbance activities and improvements to be installed and/or provided. Except as otherwise provided in this Section, the bond shall be administered and processed in accordance with the bond provisions set forth in the City's Subdivision Ordinance regarding bonds and security for subdivision public improvements.

16.44.530 Re-vegetation Bond

Prior to issuance of a land disturbance permit, the applicant shall be required to enter into a re-vegetation bond agreement in a form acceptable to the City providing security to insure installation and completion of re-vegetation improvements required to be installed and/or provided pursuant to the provisions of this Chapter and the land disturbance permit. The applicant shall be required to install and complete all re-vegetation improvements in accordance with the terms and conditions of the land disturbance permit, the bond agreement, and all applicable ordinances, resolutions, standards, specifications and plans. The bond shall be equal to 100% of the engineers estimated cost, and approved by the City Engineer, of the re-vegetation improvements required to be installed and/or provided. Except as otherwise provided in this Section, the re-vegetation bond shall be administered and processed in accordance with the bond provisions set forth in the City's Subdivision Ordinance regarding bonds and security for subdivision public improvements.

16.44.550 Permit Holder Supervision and Inspection.

The land disturbance permit holder shall provide, at the permit holders sole cost and expense, all required supervision, inspection and safety precautions before, during and after all land disturbance activities in accordance with the LDDCS and other applicable City Ordinances, rules, regulations, standards and specifications regarding such activities. The land disturbance permit holder shall be required, at the permit holders sole cost and expense, to design, inspect and certify all land disturbance activities at such intervals and in accordance with such design, inspection and certification standards and requirements provided in the Land Disturbance Design and Construction Standards and other applicable City Ordinances, rules, regulations, standards and specifications. Certain land disturbance activities may require continuous or constant inspection and supervision by a civil engineer or other authorized inspector, as a condition of the land disturbance permit or when deemed necessary by the City Engineer, in accordance with the terms and conditions of this Chapter and the LDDCS.

16.44.560 City Inspections.

In addition to permit holder inspections and certifications, all land disturbance activities shall be subject to City inspection as specified and required in the LDDCS, and other applicable City Ordinances, rules, regulations, standards and specifications. The City may also make or require other inspections of land disturbance activities to ascertain compliance of such work with the land disturbance permit and applicable City Ordinances, rules, regulations, standards and specifications, when deemed necessary by the City Engineer, in accordance with the terms and conditions of this Chapter and the LDDCS.

16.44.570 Additional Inspections or Testing.

The City Engineer may require additional inspections and/or testing of land disturbance activities by an approved testing agency when deemed necessary by the City Engineer in accordance with the terms and conditions of this Chapter and the LDDCS. Any such additional inspections and/or testing shall be at the permit holders expense.

16.44.580 Inspection Requests.

When inspections are required to be conducted by the City, the permit holder, or authorized agent of the permit holder, shall notify the City Engineer or designated Engineering Inspector that such work is ready for inspection at least one (1) business day before the inspection desired.

16.44.590 Duty to Keep Work Accessible and Exposed.

The permit holder shall cause the land disturbance activities and work to be accessible and exposed for inspection by the applicable required inspector until such inspection has been conducted and approved or certified, as applicable. The City, its officers, agents and employees, shall not be liable for any expense incurred by the permit holder in removing or replacing any materials or improvements required to allow inspection.

16.44.600 Entry Onto Premises.

The City, and its authorized representatives, shall have access to the premises described in the land disturbance permit for the purpose of inspecting the progress of the work.

16.44.610 Certification or Approval.

Inspections and certifications required to be made by the permit holders engineer shall be conducted and certification of the same submitted to the City prior to further construction or land disturbance activities. Inspections required to be made by the City shall be conducted and approved by the City prior to further construction or land disturbance activities.

16.44.620 Transfer of Responsibility for Certification.

If the land disturbance permit holder changes the civil engineer, the soils engineer, the engineering geologist, the contractor, or the testing agency of record during the course of permitted work, the land disturbance permit holder shall file an assignment and assumption agreement of the new engineer, contractor or testing agency responsible for certification of the site or project. Such assignment and assumption agreement shall be filed with and approved by the City Engineer.

16.44.630 Final Inspection.

Final inspection of the permitted land disturbance activities shall be conducted by the City. No final inspection of permitted land disturbance activities shall be scheduled or conducted until and unless all work has been completed in accordance with the land disturbance permit, the final approved plans and specifications, and all applicable City Ordinances, rules, regulations, standards and specifications, including, but not limited to, installation of all drainage facilities and protection devices, all required re-vegetation, and all required erosion and sediment control measures. No final inspection shall be scheduled or conducted until the permit holder has submitted, and the City has approved, a post-construction maintenance schedule for the re-vegetation, erosion control and other required improvements.

16.44.640 Building Permits.

No building permit or other development approval shall be given for any property, parcel, site or project for which a land disturbance permit has been issued until final inspection and approval has been given under the land disturbance permit, unless this requirement is waived in writing by the City Engineer.

16.44.650 Validity of Inspection.

Any inspection approval or certification shall not be construed to be an approval of a violation of any of the provisions of this Chapter or any other applicable law, ordinance, rule, regulation, standard or specification. Inspections presuming to give such authority shall be deemed invalid.

16.44.660 Enforcement.

This Chapter is to be enforced pursuant to the provisions set forth herein as applicable. The City Engineer and other Enforcement Authorities are responsible for the enforcement of the provisions of this Chapter.

16.44.670 Violations.

(a) Violations Enumerated. No person shall fail, refuse, or neglect to comply with the following:

(1) Provisions of this Chapter and land disturbance permits issued in accordance with this Chapter

(2) Orders issued by the City Engineer or the Building Official pursuant to the provisions of this Chapter;

(3) Conditions imposed on land disturbance permits pursuant to the provisions of this Chapter; and

(4) Rules and regulations of the office of the City Engineer with respect to grading, which were in effect at the time the land disturbance permit was issued.

(b) Continuing Violation. Each and every day, or portion thereof, during which any violation of any of the provisions of this Chapter is committed, continued, or land disturbance permitted, shall be considered a separate offense.

16.44.680 Remedies and Enforcement Powers.

(a) Nothing herein is intended to limit or prohibit the enforcement of the City of South Jordan Municipal Code or other applicable lawsand /or ordinances through civil or criminal process where the City has determined that enforcement of the procedures outlined in these sections will not result in effective redress, where there have been repeated violations of the provisions of this Chapter, or where the severity of the violation warrants redress through civil or criminal action.

(b) The following sanctions shall be available to redress violations of the provisions of this Chapter:

(1) Issuance of a Notice of Violation;

(2) Revocation or suspension of land disturbance permits, conditional use land disturbance permits or plan or other approvals issued by City of South Jordan;

(3) The placement of requirements for corrective action on land disturbance permits, licenses, or other entitlements issued by City of South Jordan as a condition of the land disturbance permit, license, or entitlement;

(4) Requiring the responsible permit holder to post a bond, irrevocable letter of credit, or other adequate security to ensure compliance with the provisions of this Chapter or other applicable laws;

(5) Withholding of permits, certificates or other forms of authorization pertaining to any land where there exists an uncorrected violation of this Chapter;

(6) Issuance of a stop work order;

(c) Penalties. Violation of any of the provisions of this Chapter shall upon conviction be punishable as a class C misdemeanor.

(d) Other remedies; remedies cumulative. The City shall have such other remedies as are and as may be from time to time provided by State law or City ordinance for the violation of any provision of this Chapter. Remedies shall be cumulative.

(e) At the time of issuance of a notice of violation, the Enforcement Authority will determine the appropriate level of sanction and will provide written notice to the responsible person of the proposed level of sanction and the reasons therefore as outlined herein.

(f) Where multiple violations have occurred or are occurring, each violation of the provisions of this Chapter or other applicable laws is subject to a separate sanction. The City may take into account the number and severity of violations in determining the type of action to take against the offending party.

16.44.690 Notice of Violation.

(a) When a violation is discovered, and the responsible permit holder has not been issued a previous Notice of Violation for the same violation within the past twelve (12) months, the Enforcement Authority shall issue a Notice of Violation in order to notify the responsible person of the violation and to order that the violation be corrected within fourteen (14) calendar days. The notice may include a stop work order that orders the responsible person to immediately cease all work on the project until the violation is corrected. The issuance of a Notice of Violation shall not be a prerequisite for the issuance of a stop work order by the City.

(b) The Notice of Violation shall be in writing and set forth the facts constituting the violation, the specific provisions of the law which have been violated, the proposed sanctions for the violation, and shall require that the City Engineer be contacted within five calendar days if the responsible person disputes the Notice of Violation.

(c) Failure to correct the violation within the amount of time specified in the Notice of Violation may result in issuance of a citation, a stop work order, a notice of intent to suspend or revoke, or other enforcement action as deemed appropriate by the City.

(d) In the case of a violation involving: continuing construction or development, an emergency situation (as reasonably determined by the City), or a violation for which a previous Notice of violation was issued within the past twelve (12) months, the City may use the enforcement powers and remedies available to it under this chapter without prior notice. In such case, notice shall be sent simultaneously with the beginning of enforcement action.

16.44.700 Suspension or Revocation of Land Disturbance Permit.

The City Engineer may suspend or revoke a land disturbance permit and/or suspend any land disturbance activity if:

(a) Conditions at the site vary from those shown on the approved plans;

(b) Construction does not conform to the approved plans, time schedules, or conditions of the land disturbance permit;

(c) The work does not comply with applicable ordinances, rules, regulations and standards;

(d) The site is left in a condition hazardous to the public or to the adjacent properties, and the land disturbance permit holder does not comply with reasonable requirements to correct said conditions;

(e) The land disturbance permit holder does not comply with reasonable requirements to safeguard the workers, the public, or other persons acting in a lawful manner;

(f) The land disturbance permit holder, in connection with the operations for which the land disturbance permit was issued, fails to operate equipment properly on public roads; allows material to encroach into, obstruct, or be deposited within a public road right-of-way or within a drainage channel in a manner not authorized by said land disturbance permit; or causes unauthorized obstruction or diversion of drainage channels;

(g) The land disturbance permit holder fails to have a qualified, City-approved

inspector working under the supervision of a civil engineer on the site during operations, when so required by the land disturbance permit, or fails to have the work under proper supervision;

(h) Emergency conditions exist on the site, which constitute a threat to health, safety or public welfare, whether or not caused by the actions of the land disturbance permit holder; or

(i) The land disturbance permit holder has been issued a Notice of Violation and has failed to correct the violation within the time specified.

16.44.710 Notice of Suspension or Revocation.

Prior to the suspension or revocation of a land disturbance permit, the City Engineer shall give the land disturbance permit holder written notice of intention to suspend or revoke the land disturbance permit, the notice shall specify the grounds for such intended action and the time and place for the holding of a conference between the City Engineer and the land disturbance permit holder, or its authorized representatives, to review the grounds for the proposed action. Notice of the proposed action shall be given to the land disturbance permit holder at least forty-eight (48) hours, before the time set for the conference, if given by personal service, and at least ninety-six (96) hours, before the time set for the conference, if given by first-class mail. Weekends and holidays are not counted in determining the time for the giving of notice and the holding of the conference. With the consent of the land disturbance permit holder, the time periods provided for herein may be shortened or extended.

In the case of an emergency, and only where an unacceptable level of risk to public health, safety and welfare would incur from any delay, the notification deadlines may be disregarded and the City Engineer may act decisively to reduce or eliminate the hazard. In such a situation, the City Engineer will then make every reasonable effort to confer with the land disturbance permit holder in a timely manner to resolve the concerns, which resulted in the suspension. Costs, including additional City staff time and equipment, shall be borne by the land disturbance permit holder.

16.44.720 Cessation of Work.

Upon receipt of the notice of intended suspension or revocation, the land disturbance permit holder is to cease all work in connection with the land disturbance permit, with the exception of work necessary to correct any condition cited in the notice of proposed action as a ground for suspension or revocation, and work of an emergency nature. The time necessary for completion of these emergency corrections will be determined by the City Engineer.

16.44.730 Decision of Suspension or Revocation.

(a) Within twenty-four (24) hours following the conclusion of the conference, the City Engineer or designee is to render a written decision, either revoking the land disturbance permit, suspending the land disturbance permit, or authorizing the land disturbance permit holder to proceed with the work. Such action may be with or without conditions. The decision is to be served upon the land disturbance permit holder by personal service or by first-class mail, postage prepaid, within twenty-four (24) hours after the rendition of the decision.

(b) If the land disturbance permit holder fails to correct the objectionable or emergency conditions causing the revocation or suspension, the City may cause the work

necessary to correct said conditions to be done, and the City may take action against the land disturbance permit holder's security to cover the cost of performing the work.

(c) The City Engineer may either reinstate or revoke any land disturbance permit that has been suspended.

16.44.740 Right of Entry.

In the administration and enforcement of this Chapter, any duly authorized official or employee of the City shall have authority to enter upon the premises of the permitted site for the purposes of investigation and inspection; provided however, that such right of entry shall be exercised at reasonable times. The land disturbance permit constitutes written authority for entry by the City. No land disturbance permit holder shall refuse to allow such inspection. In the case where the responsible person is not a land disturbance permit holder, the Enforcement Authority is to provide twenty-four (24) hours written notice of the intent to inspect, except in emergency situations or when consent has been obtained of the owner and/or occupant of the site to be inspected. The notice shall state that the property owner has the right to refuse entry and that, in the event such entry is refused, inspection may be made only upon issuance of a search warrant as allowed by law.

16.44.750 Appeals.

Any person aggrieved of a final determination of the City Engineer in the issuance, denial, suspension or revocation of a land disturbance permit may appeal such decision of the City Engineer to the City Manager by filing a written appeal with the City Recorder within thirty (30) days from the date of the City Engineers decision. The City Manager will give written notice to the City Engineer, the appellant, and all other persons requesting the same, specifying the place, date, and time of hearing the appeal.

16.44.760 Liability.

Neither issuance of grading approval under the provisions of this Chapter, nor compliance with the provisions this Chapter, or with any conditions imposed in a land disturbance permit issued under the provisions of this Chapter, is to relieve any person from responsibility for damage to any person or property or impose any liability upon the City for damage to any person or property.

16.44.770 Right to Stop Work.

Nothing herein is to be construed as indicating that the City cannot immediately stop the work being performed if, in the opinion of the City Engineer, the damage being done is of such a nature that it requires immediate cessation of the work. This could result in the bypassing of the normal processes of notices and increasing levels of enforcement, which will typically be followed.

16.44.780 Parking Lots

(a) Minimum parking lot grades for asphalt concrete shall be one (1%) percent.
(b) Minimum grade for concrete ribbon drains shall be one-half (1/2%) percent.
(c) Plan Check and Inspection of the parking lot grading, construction of curbs, gutters, drainage or other appurtenant structures, and the paving shall be performed by the Engineering Division. A Land Disturbance Permit shall be obtained from the Engineering Division and inspection fee paid. The City Engineer shall have the authority to request changes to the plan as deemed necessary for drainage and/or circulation.

(d) The contractor shall be responsible for the clearing of the proposed work area, and relocation costs of all utilities. The City will be informed twenty-four (24) hours prior to the beginning of construction.
(e) A compaction report by a soils engineer shall certify ninety (90%) percent sub-base and ninety-five (95%) percent of base prior to calling for second inspection and placement of asphalt paving.
(f) If no preliminary soils report is provided specifying the paving section, the structural section shall be four (4") inches asphalt concrete and eight (8") inches Class II aggregate base.

SECTION 3. Severability. If any section, part or provision of this Ordinance is held invalid or unenforceable, such invalidity or unenforceability shall not affect any other portion of this Ordinance and all sections, parts, provisions and words of this Ordinance shall be severable.

SECTION 4. Effective Date. This Ordinance shall become effective immediately upon publication or posting as required by law.

PASSED AND ADOPTED BY THE CITY COUNCIL OF SOUTH JORDAN CITY, STATE OF UTAH, ON THIS_____DAY OF_____, 2007 BY THE FOLLOWING VOTE:

	YES	NO	ABSTAIN	ABSENT
Kathie L. Johnson	____	____	____	____
Larry Short	____	____	____	____
Aleta A. Taylor	____	____	____	____
Brian C. Butters	____	____	____	____
Leona Winger	____	____	____	____

_____
W. Kent Money, Mayor

ATTEST: _____
Anna M. West, City Recorder

Mayor-William Kent Money
Council Member-Brian C. Butters
Council Member-David W. Colton
Council Member-Bradley G. Marlor
Council Member-Larry Short
Council Member-Leona Winger

City Manager-Ricky A. Horst

SOUTH JORDAN
UTAH

1600 West Towne Center Drive / South Jordan, UT 84095/ Telephone (801) 254-3742 / Fax (801) 254-3393
e-mail: info@sjc.utah.gov http://sjc.utah.gov

LAND DISTURBANCE PERMIT
APPLICATION AND AGREEMENT
Application Fee - $50.00

Date: _____

Name of Applicant: _____

Mailing Address: _____

Phone # (24 Hrs) _____ Fax: _____

Please Check One:
- ☐ Subdivision
- ☐ Site Plan
- ☐ Other Specify _____

Location of Land Disturbance: _____

_____

Purpose of Land Disturbance: _____

_____

Cubic Yards _____ Square Feet _____

Please provide the following:
- ☐ Permit Fee as adopted by the South Jordan City Council ($50.00)
- ☐ Vicinity Map showing the site location
- ☐ Property line, dimensions and bearing of the property
- ☐ Location of existing buildings or structures on the property and adjacent property within 50 feet of property boundary.
- ☐ Accurate topography showing contours of the existing and proposed ground elevations.
- ☐ The elevations, dimensions, locations, extent, and slopes of all proposed land disturbance activities shown by contours.
- ☐ A certification of the quantity and type of material of proposed excavation or fill.
- ☐ The estimated starting and completion dates
- ☐ Detailed plans of all drainage devices, walls, cribbing, dams, or other protective devices to be constructed with or as a part of the proposed work

Mayor-William Kent Money
Council Member-Brian C. Butters
Council Member-David W. Colton
Council Member-Bradley G. Marlor
Council Member-Larry Short
Council Member-Leona Winger

City Manager-Ricky A. Horst

SOUTH JORDAN
U T A H

1600 West Towne Center Drive / South Jordan, UT 84095/ Telephone (801) 254-3742 / Fax (801) 254-3393
e-mail: info@sjc.utah.gov http://sjc.utah.gov

- ☐ Finish Floor Elevation of any proposed structures
- ☐ Temporary construction entrance and exit plan
- ☐ Type of structure to be constructed on site
- ☐ Erosion Control Plan
- ☐ Re-vegetation Plan
- ☐ Copy of notice of intent (NOI) from the State of Utah, "Division of Water Quality"

Conditions of Approval:

1. Applicant shall apply appropriate tackifier to dirt stockpile if requested by the City of South Jordan
2. Applicant shall be responsive to adjacent property owners and will address all concerns expressed in a timely manner.
3. Applicant shall maintain all erosion control measures.
4. The applicant must notify the City Engineer or the Engineering Inspector twenty four (24) hours in advance before any work is started.
5. All public roadway signage shall be in accordance with the Manual of Uniform Traffic Control Devices (MUTCD).

Applicant is required to consult utility companies operating in this area before excavation. In granting this permit the City of South Jordan makes no representation as to the location of utility facilities in the area to be excavated or the affect of the permitted excavation on said utilities.

Prior to beginning any land disturbance activities, property must be protected by barriers which indicate which tree can and cannot be removed and must be inspected by and Engineering Division Inspector.

In consideration for granting of a Land Disturbance Permit by the City of South Jordan, the above-named applicant herby commits to: (1) to perform the excavation applied for in a professional manner and in conformity, with ordinances of the City of South Jordan and; (2) to hold harmless the City of South Jordan, its officers, agents, employees or servants from any and all costs, damages and liabilities that which may accrue or be claimed to accrue by reason of any work performed under a permit issued pursuant to this application.

_____ _____/_____/_____
Signature of Applicant Date

_____ _____/_____/_____
Director of Community Development/City Engineer or designee Date

SOUTH JORDAN
UTAH

Engineering Division – Community Development Department
1600 West Towne Center Drive / South Jordan, UT 84095/ Telephone (801) 254-3742 / Fax (801) 254-3393
e-mail: info@sjc.utah.gov http://sjc.utah.gov

Land Disturbance Permit No. LDP-200__- _____

Issuance Date: _____
Project Name: _____
Location: _____
Parcel No.: _____
Applicant Name: _____
Address: _____
Phone #: _____

This permit shall become null and void if work is not commenced with 180 days of the date of issuance, or if work is suspended or abandoned for a period of 30 days or more at any time after the work has commenced. Commencement or continuation of work shall be verified only by inspection reports from the City of South Jordan Engineering Inspectors. Inspections are required before any work is covered. Please call if you need further information about when an inspection is required.

Conditions of approval:

1. Applicant shall apply appropriate tackifier to dirt stockpile if requested by the City of South Jordan
2. Applicant shall be responsive to adjacent property owners and will address all concerns expressed in a timely manner.
3. Applicant shall maintain all erosion control measures.
4. Applicant shall be familiar with the Land Disturbance Ordinance and Land Disturbance Design and Construction Standards.
5. Applicant shall post erosion Control Plan, Notice of Intent (NOI, and Land Disturbance Permit onsite.
6. Applicant shall inspect BMP's every 14 days or after any storm event and record inspection in Inspection Log. Inspection Lof shal be posted and maintained onsite with the erosion control plan.

An additional fee shall be charged for weekend work or after hours as determined by the City Engineer or his designee.

Applicant shall also be advised that any work performed in the public right of way shall require a separate right of way or encroachment permit.

The applicant must notify the City Engineer or the Engineering Inspector twenty four (24) hours in advance before any work is started. Weekend or after hours work requires the Engineering Inspector to be present.

All public roadway signage shall be in accordance with the Manual of Uniform Traffic Control Devices (MUTCD).

Applicant is required to consult utility companies operating in this area before excavation. In granting this permit the City of South Jordan makes no representation as to the location of utility facilities in the area to be excavated or the affect of the permitted excavation on said utilities.

Prior to beginning any land disturbance activities, property must be protected by barriers which indicate which tree can and cannot be removed and must be inspected by and Engineering Division Inspector.

Engineering Division – Community Development Department
1600 West Towne Center Drive / South Jordan, UT 84095/ Telephone (801) 254-3742 / Fax (801) 254-3393
e-mail: info@sjc.utah.gov http://sjc.utah.gov

In consideration for granting of a Land Disturbance Permit by the City of South Jordan, the above-named applicant herby commits to: (1) to perform the excavation applied for in a professional manner and in conformity, with ordinances of the City of South Jordan and; (2) to save harmless the City of South Jordan, its officers, agents, employees or servants from any and all costs, damages and liabilities that which may accrue or be claimed to accrue by reason of any work performed under a permit issued pursuant to this application.

I hereby certify that I have read and examined this permit, the Land Disturbance Ordinance, and the Construction Standards and that the information provided by me is true and correct. All provisions of laws and ordinances governing this type of work will be complied with whether specified herein or not. The granting of a permit does not presume to give authority to violate change the provisions of any other state or local law regulating construction or performance of construction

Signature of Applicant	Date	Please Print Name
Signature of City Engineer or designee	Date	Please Print Name

THIS PERMIT MUST BE POSTED AT THE JOB SITE AT ALL TIMES