## SIDE VIEW

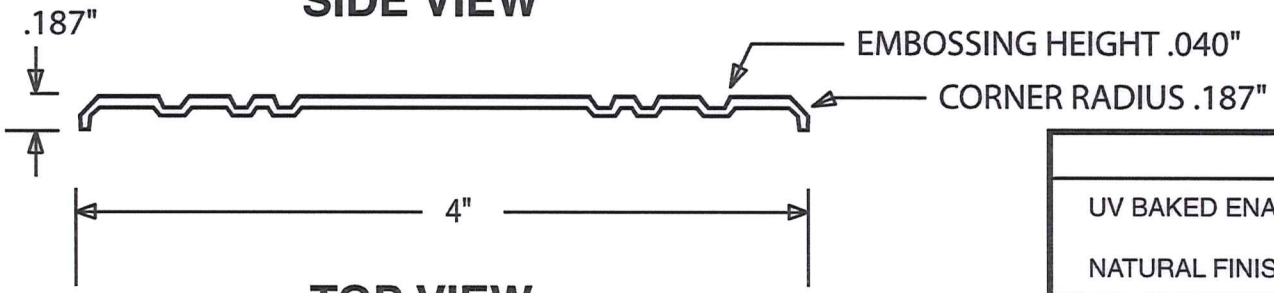


## TOP VIEW

| FINISH | | |
|---|---|---|
| UV BAKED ENAMEL - 1-2 COLOR OPTION<br>SAND BLASTED FRONT & REAR<br>NATURAL FINISH FOR PAINT & ADHESIVE BONDING | | |
| **MATERIAL** | **THICKNESS** | **WEIGHT** |
| 304 ANNEALED STAINLESS STEEL | .062" | .218 LBS. |
| BRASS | .062" | .250 LBS. |
| ALUMINUM | .062" | .082 LBS. |
| ANODIZED ALUMINUM | .062" | .082 LBS. |
| **LEGIBILITY WARRANTEE** | | |
| STAINLESS STEEL & BRASS -30 YEARS<br>ALUMINUM & ANODIZED -15 YEARS | | |
| **U.S. & FOREIGN PATENTS PENDING** | | |
| **OPTIONS** | | |
| SQUARE HOLE: 1/4" X 1/4"<br>SERIAL NOS.: .250" HIGH, MAX. 6 DIGITS<br>ENGRAVING COPY: 3 LINES, 30 CHARACTERS | | |

# ART APPROVAL FORM

This is our interpretation of your artwork requirements. Review for accuracy and note any changes you wish to make before signing this approval form.
NOTE: This art approval request form is required to begin the manufacturing process.

| Approved as is | Submit new art with changes | Date |
|---|---|---|
| | | |

PROPRIETARY AND CONFIDENTIAL
THE INFORMATION CONTAINED IN THIS DRAWING IS THE SOLE PROPERTY OF ALMETEK INDUSTRIES, INC., ANY REPRODUCTION IN PART OR AS A WHOLE WITHOUT THE WRITTEN PERMISSION OF ALMETEK INDUSTRIES, INC. IS PROHIBITED.

Customer: SOUTH JORDAN CITY
Job Name: STDM-9131-SSP
Date: AUGUST 29, 2007

SHEET 1 OF 1 SCALE 1:1

| TOLERANCE | |
|---|---|
| FRACTION | ± 1/8" |
| .XX | ± .06" |
| .XXX | ± .005" |

ALMETEK
1-800-248-2080
Fax: 908-850-9618

| Drawn by: | DATE | REV. # 2 | DATE 11/16/07 | REV. # | DATE | REV. # | DATE |
|---|---|---|---|---|---|---|---|

# Theft-Resistant Permanent Installations for Storm Drain Markers

**30-Year Warranty***

**For Stainless, Brass, Aluminum and Anodized Aluminum**

## WET CONCRETE INSTALLATION

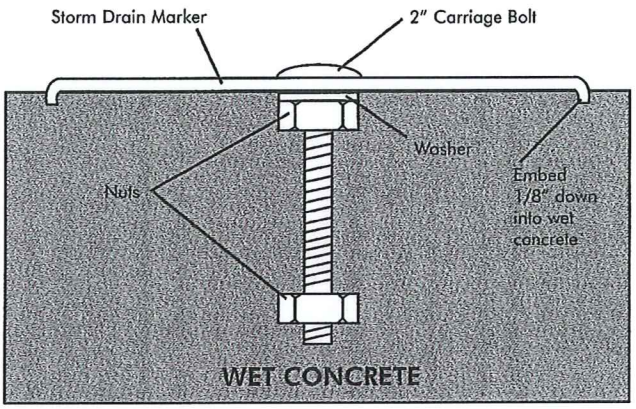


**HARDWARE:**

**CB-2" Set:**

1- 2" 1/4"-20 SS Carriage Bolt
1- 5/16"x5/8" O.D. x .062" thick SS Washer
2- 1/4"-20 UNC SS Nuts

## BOLT-ON INSTALLATION

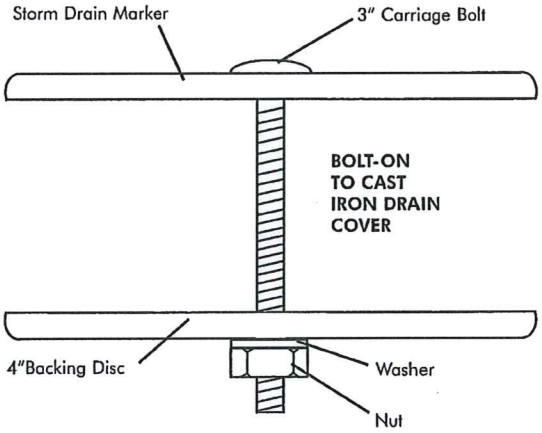


**HARDWARE:**

**CB-3" Set:**

1- 4" SS Backing Disc
1- 3" x 1/4"-20 SS Carriage Bolt
1- 5/16" x 5/8" O.D. x .062" thick SS Washer
1- 1/4"-20 UNC SS Nut

**NOTE: All 4" Discs have square hole for carriage bolt insertion**

* After the appropriate installation, if the Marker is stolen or missing, Almetek will replace the Marker and hardware at no cost.

## SURFACE MOUNT INSTALLATION

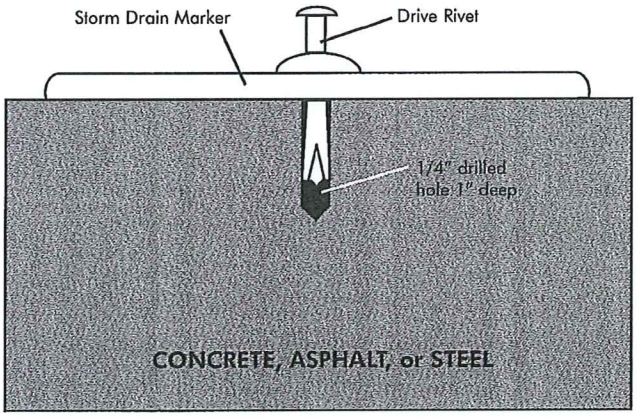


**HARDWARE:**

1-**DR250**-1/4" x 3/4" Drive Rivet-STDM
1-**DB250**-1/4" Carbide Drill Bit
Hammer (not supplied)
optional: adhesive

## SUB-SURFACE MOUNT INSTALLATION

PATENT PENDING

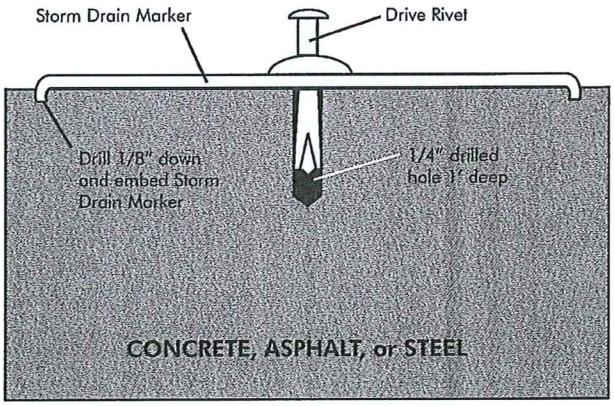


**HARDWARE:**

1-**DR250**-1/4" x 3/4" Drive Rivet- STDM
1-**CDB-4**-Carbide Drill Bit, Anchor, Pilot (not shown)
Hammer (not supplied)
optional: adhesive


ALMETEK

**Almetek Industries, Inc.,** 2 Joy Drive, Hackettstown, NJ 07840 • 908-850-9700 • Fax: 908-850-9618
www.almetek.com • email: csr@almetek.com