STANDARD DRAWINGS

DRAWING INDEX

WATER

3005 STANDARD SYMBOLS
3010 TRENCH CROSS SECTION TERMINOLOGY & STANDARD SIZES
3040 VALVE BOX INSTALLATION
3045 MECHANICAL JOINT TAPPING SLEEVE
3050 LOCATION OF FIRE HYDRANTS
3055 FIRE HYDRANT INSTALLATION WITH MAIN IN THE ROADWAY
3056 FIRE HYDRANT INSTALLATION WITH MAIN OUTSIDE THE ROADWAY
3060 WASHOUT VALVE ASSEMBLY
3065 WATER METER LOCATION
3070 COMBINATION AIR VACUUM VALVE ASSEMBLY
3075 AIR VENT DETAIL
3080 DIRECT BEARING THRUST BLOCKS
3085 TIE DOWN THRUST RETRAINTS
3090 ¾” and 1” METER SERVICE
3091 1 ½” and 2” METER SERVICE
3092 METER SERVICE
3095 ¾” - 2” WATER METER PLAN SERVICE INSTALLATION
3100 3” – 8” WATER VAULT DETAIL
3110 SAMPLING TAP FOR RESIDENTIAL SUBDIVISIONS
2001 BACKFLOW PREVENTION DEVICE IRRIGATION CONNECTION
------- WATER MANHOLE COVER
------- CONDUIT TERMINATION UNDER EQUIPMENT
1 of 3 PRV VAULT DETAILS
2 of 3 PRV VAULT DETAILS
3 of 3 PRV VAULT DETAILS
------- RTU PEDESTAL ELEVATION

IRRIGATION

IRR-01 LINE DRAWING TRANSFORMER ENCLOSURE
IRR-02 STRONG BOX COMBO METER ENCLOSURE
IRR-03 LINE DRAWING TRANSFORMER ENCLOSURE
IRR-04 PEDESTAL MOUNT CONTROLLER
IRR-05 SLEEVING
IRR-06 STOP & WASTE VALVE
IRR-07 BACKFLOW RPA
IRR-08 BACKFLOW COVER
IRR-09 PIPE & WIRE TRENCH
IRR-10 THRUST BLOCKING
IRR-11 LARGE GATE VALVE
IRR-12 MANUAL DRAIN
IRR-13 CONTROL VALVE MANIFOLD SCH-80
IRR-14 CONTROL VALVE MANIFOLD HARCO
IRR-15 QUICK COUPLER VALVE
IRR-16 REMOTE CONTROL VALVE
IRR-17 4 INCH POP-UP SPRAY HEAD
IRR-18 6 INCH POP-UP SPRAY HEAD
IRR-19 12 INCH POP-UP SPRAY HEAD
IRR-20 SMALL ROTOR HEAD
IRR-21 MEDIUM ROTOR HEAD
IRR-22 MEDIUM ROTOR SHRUB RISER
IRR-23 SPORTS TURF HEAD
IRR-24 TREE WATERING SYSTEM
IRR-25 IN LINE DRIP GRID LAYOUT
IRR-26 DRIP SUB SURFACE TURF

IRR-27 DRIP ON SLOPE
IRR-28 DRIP POINT SOURCE EMITTER
IRR-29 DRIP PVC TO PE CONNECTION

SECONDARY

2001 BACKFLOW PREVENTION DEVICE IRRIGATION CONNECTION
2002 SECONDARY WATER LATERAL LAYOUT
2005 VALVE BOX INSTALLATION
2006 DIRECT BEARING THRUST BLOCKS TIE DOWN RESTRAINTS
2007 TIE DOWN THRUST RESTRAINTS
2008 WASHOUT VALVE ASSEMBLY
2010 SECONDARY WATER AIR VACUUM RELEASE VALVE
2011 SECONDARY RESIDENTIAL INSTALLATION
2012 SECONDARY WATER SERVICE CONNECTION
2014 PRESSURE IRRIGATION CANAL GATE AND WEIR BOX
2015 PRESSURE IRRIGATION CANAL GATE AND WEIR BOX
2016 DRAIN VALVE DETAIL
2017 COVER COLLAR
2020 IRRIGATION SLIDE GATE DETAIL
2021 HEADWALL DETAIL
2022 HEADWALL DETAIL
2023 SILT TRAP BOX DETAIL
2024 SECONDARY WATER METER BOX

STORM DRAIN

SD-1 MANHOLE COVERS
SD-2 MANHOLE COVERS 2
SD-3 STORM DRAIN MARKERS
SD-4 STORM DRAIN MARKER ANCHORS
4010 DRY WELL
4015 RIPRAP APRON

STREETS

3010 TRENCH CROSS SECTION TERMINOLOGY & STANDARD SIZES
3012 ROAD WIDENING
S-1 ROAD WIDTHS AND BORDER AREAS
S-2 SINGLE FAMILY REAR AND SIDE PARK STRIPS ON COLLECTOR STREETS
S-3 SIGN POSTS
SN 10B SLIP BASE SIGN BASE (B3) INSTALLATION
DT-01 CURB EXTENSION
3020 SIGNAGE FOR GABRAGE ROUTES

STREETLIGHT

SL-1 STANDARD UTILITY TRENCH
SL-2 ELECTRICAL BOX LID
SL-3 STEELIGHT PEDESTALS
TSG 007077 CATEGORY 1a STREETLIGHT
TSG 002636 CATEGORY 1b STREETLIGHT
TSG 003175 CATEGORY 2 STREETLIGHT
TSG 007220 CATEGORY 3 STREETLIGHT
TSG 003314 CATEGORY 4 STREETLIGHT
SP-6224-GLV CABLE RETAINER ASSEMBLY FOR 4” FOUNDATIN ANCHOR
SP-6200-GLV CABLE RETAINER ASSEMBLY FOR 6” FOUNDATIN ANCHOR
SP-6205-GLV CABLE RETAINER ASSEMBLY FOR 8” FOUNDATIN ANCHOR
SP-6358-GLV TUBE ASSEMBLY FOR 6” CABLE RETAINER
PB-5520 DOOR ASSEMBLY TB1-17 TRANSFORMER BASE
PB-5526 DOOR ASSEMBLY TB1-20 TRANSFORMER BASE

WATER

PROFESSIONAL ENGINEER
BRAD
KLAVANO
No. 173076-2202
12/28/22
STATE OF UTAH

8" W	EXISTING WATER
8" WATER	PROPOSED WATER
	VALVE
	FIRE HYDRANT
	PRESSURE REGULATING VALVE
	REDUCER/ENLARGER
G	GAS LINE
S S	SEWER LINE
T	TELEPHONE LINE
WM	WATER METER
E	ELECTRIC LINE
A/V	AIR AND VACUUM VALVE
B.O.	BLOW-OFF
	END CAP
	PLUG
	THRUST BLOCK

PREPARED BY:_____

SOUTH JORDAN
UTAH

SOUTH JORDAN CITY

DATE	REVISIONS	BY	DRAWN: KS / DATE 1/06	STANDARD SYMBOLS	STANDARD DRAWING 3005

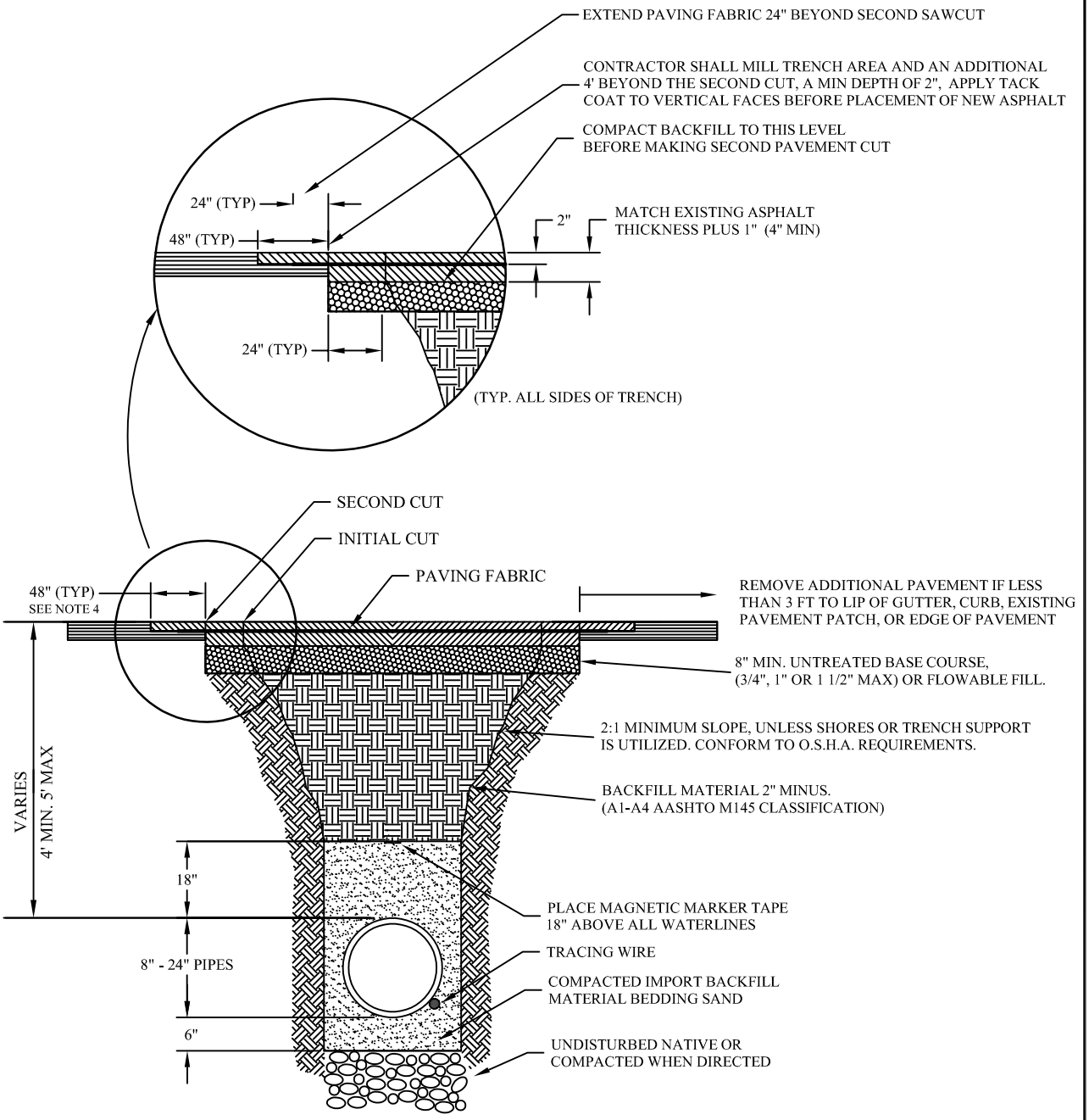

NOTES:
1. NO SAW CUTS TO END UP IN THE WHEEL PATH
2. AFTER THE SECOND CUT, PATCH TRENCH UP TO THE EXISTING ROAD SURFACE THEN MILL THE TRENCH AREA AND AN ADDITIONAL 4 FT BEYOND THE SECOND CUT OR AS DIRECT BY THE CITY ENGINEER ACCORDING TO CITY STANDARDS.
3. PAVING FABRIC PER APWA STANDARD ROADWAY PAVEMENT GEOTEXTILE, NON-WOVEN
4. IF THE OCI RATING OF THE ROAD IS BETWEEN 80 AND 100, THE 48" WILL BE INCREASED TO FULL WIDTH OF ROAD, OR AS DETERMINED BY THE CITY ENGINEER OR DESIGNEE.

PREPARED BY:_____

SOUTH JORDAN UTAH

SOUTH JORDAN CITY

DATE	REVISIONS	BY	DRAWN:	TRENCH CROSS SECTION TERMINOLOGY & STANDARD SIZES	STANDARD DRAWING
04/11		JRF	KS		3010
			DATE 1/06		

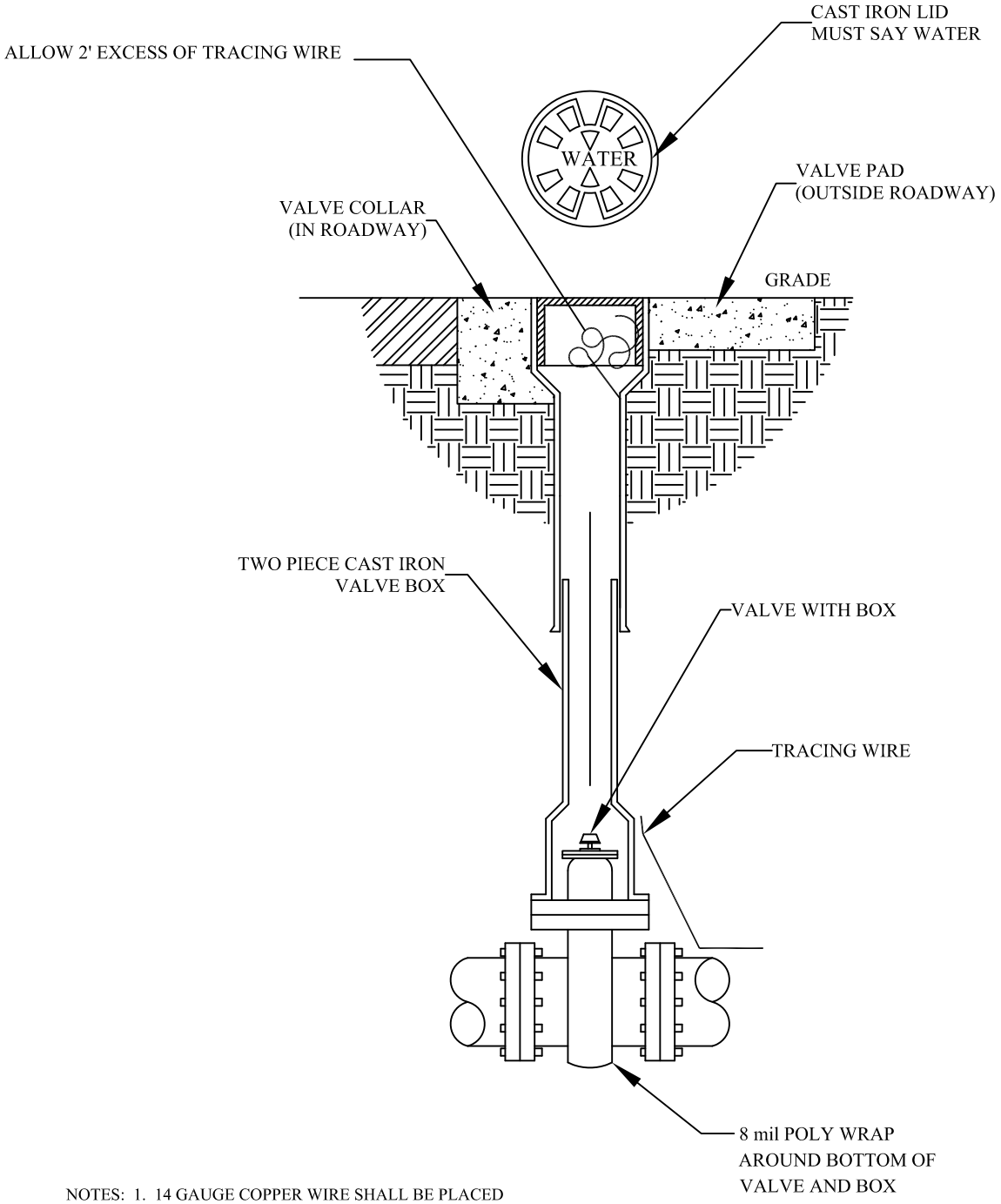

NOTES: 1. 14 GAUGE COPPER WIRE SHALL BE PLACED OUTSIDE OF BOTTOM OF BOX AND INSIDE TOP OF BOX

2. VALVE OPERATING NUTS SHALL BE WITHIN 3' TO THE FINISHED SURFACE. EXTENTIONS STEMS WITH ROCK SHIELDS SHALL BE PROVIDED WHERE DEPTHS EXCEED 4'.

PREPARED BY: _____

SOUTH JORDAN UTAH

SOUTH JORDAN CITY

DATE	REVISIONS	BY	DRAWN: KS	VALVE BOX INSTALLATION	STANDARD DRAWING 3040
			DATE 1/06		

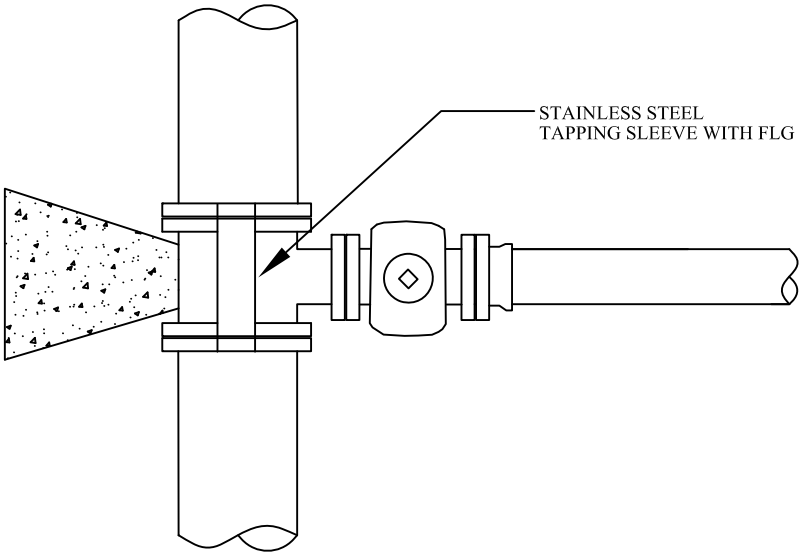

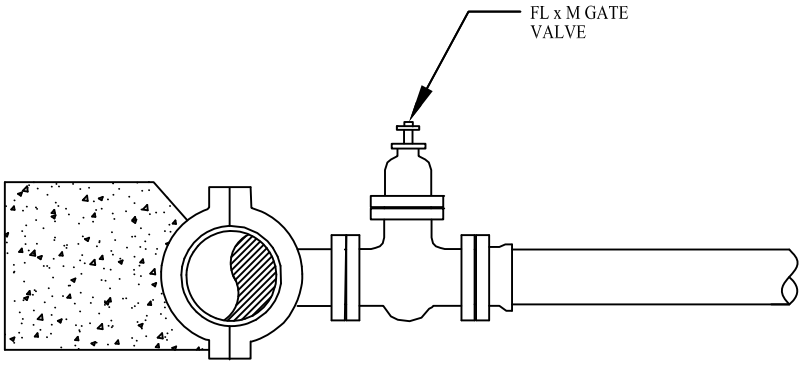

NOTES:

1. REFER TO SECTION 3.3.8 'MAIN LINE VALVES' FOR TAPPING SLEEVE AND VALVE REQUIREMENTS, AND SECTION 3.7.9 'HOT TAPPING' FOR INSTALLATION INSTRUCTIONS
   INTERSECTIONS MAY BE OMITTED.
2. SEE SECTION 3.3.4 'MAIN LINE FITTING' AND SECTION 3.7.11 'INSTALLATION OF VALVES AND FITTINGS' FOR INSTALLATION AND WRAPPING FOR BOLTED CONNECTIONS
   THRUST BLOCK DETAILS.

RECOMMENDED MATERIALS - STAINLESS STEEL TAPPING SLEEVE WITH FLG

MANUFACTURER TO BE AWWA APPROVED.

PREPARED BY:_____

SOUTH JORDAN CITY

DATE	REVISIONS	BY	DRAWN:	MECHANICAL JOINT TAPPING SLEEVE	STANDARD DRAWING 3045
			DATE		

CASE 1

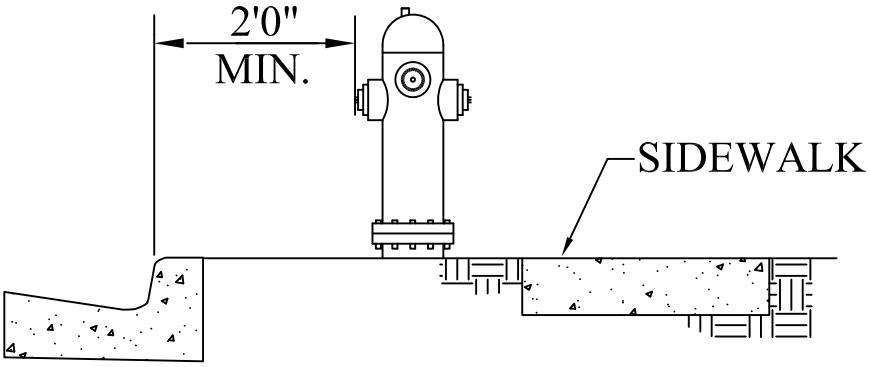

CASE 2

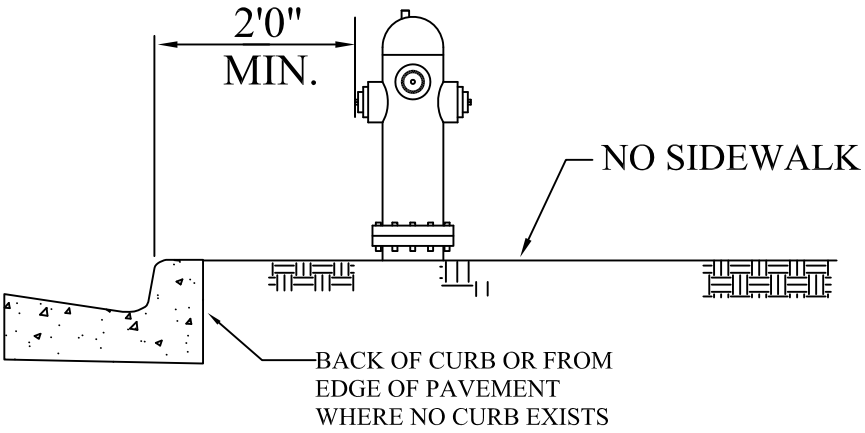

NOTES:

1. ABOVE GROUND UTILITIES SHALL BE LOCATED ON PROPERTY LINES SEPERATING LOTS.

PREPARED BY:_____

SOUTH JORDAN CITY

DATE	REVISIONS	BY	DRAWN: / DATE	LOCATION OF FIRE HYDRANTS	STANDARD DRAWING 3050

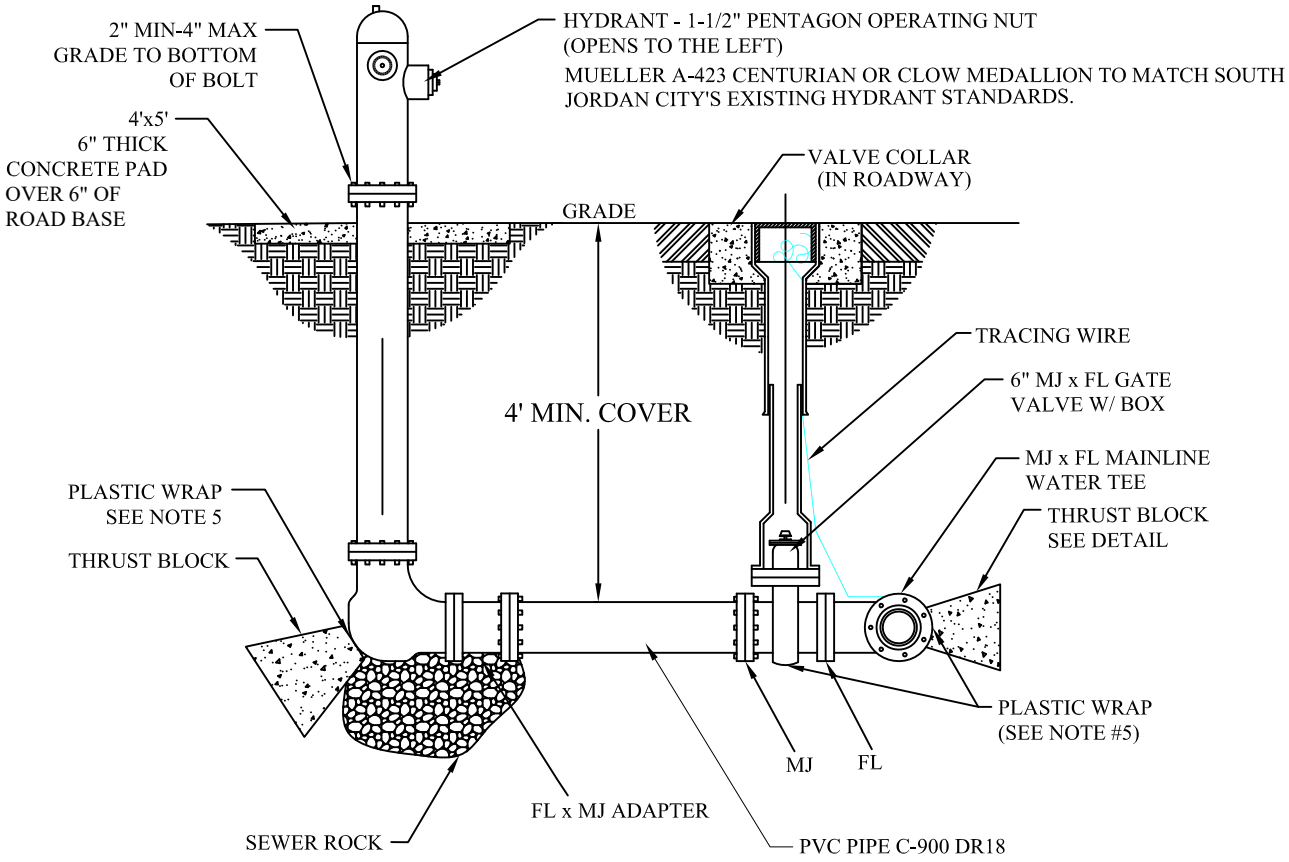

NOTES:

1. INSPECTION: PRIOR TO BACKFILLING, SECURE INSPECTION OF INSTALLATION BY ENGINEER.
2. BACKFILL: INSTALL AND COMPACT ALL BACKFILL MATERIAL PER SPECIFICATIONS.
3. HYDRANT: DRY BARREL PER AWWA C502.
   A. PROVIDE AT LEAST 1 CUBIC YARD OF SEWER ROCK AROUND DRAIN HOLE AT BASE OF HYDRANT. PLACE TAR PAPER OR PLASTIC OVER SEWER ROCK TO PREVENT SILTING.
   B. PAINT FIRE HYDRANT RED PER SOUTH JORDAN CITY'S REQUIREMENTS.
   C. APPLY POLY-FM GREASE TO ALL BURIED METAL SURFACES. WRAP WITH 8 mil THICK POLYETHYLENE SHEET AND TAPE WRAP.
   D. ALL HYDRANTS NOT IN SERVICE SHALL BE BAGGED UNTIL WATER IS AVAILABLE
4. THRUST BLOCKS: REQUIRED FOR ALL CONNECTIONS INCLUDING FLANGED OR WELDED PIPE SYSTEMS.
5. PLASTIC WRAP: PRIOR TO POURING CONCRETE, APPLY POLY-FM GREASE AND WRAP PIPE SYSTEM AND FITTINGS WITH 8 mil THICK PLASTIC SHEET TO PREVENT BONDING OF CONCRETE TO PIPE SYSTEM AND FITTINGS.
6. PLACE FOUR (4) PROTECTIVE BOLLARDS AROUND HYDRANT IF DIRECTED BY BY SOUTH JORDAN CITY.

PREPARED BY: _____

SOUTH JORDAN
UTAH

SOUTH JORDAN CITY

DATE	REVISIONS	BY	DRAWN: / DATE	FIRE HYDRANT INSTALLATION WITH MAIN IN THE ROADWAY	STANDARD DRAWING 3055

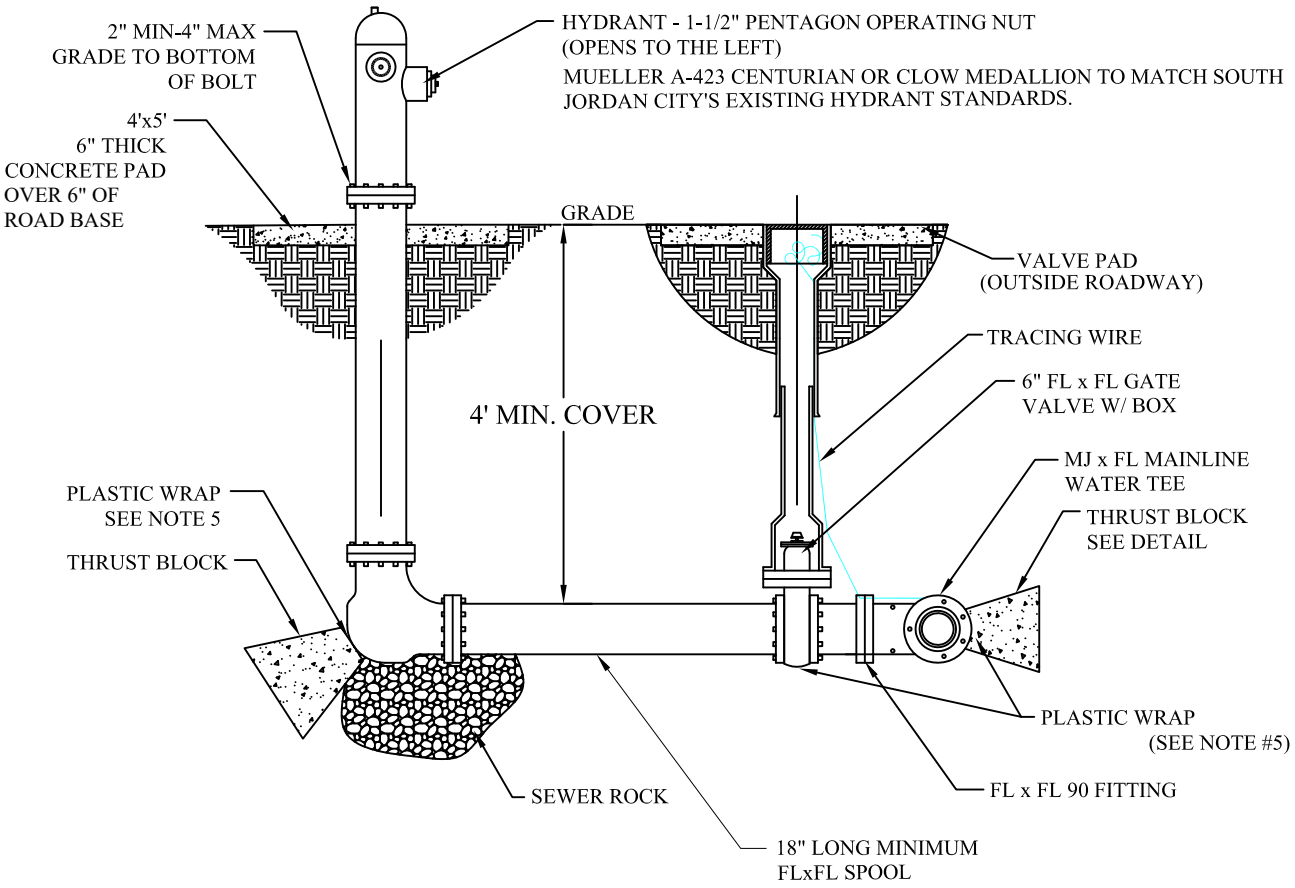

NOTES:

1. INSPECTION: PRIOR TO BACKFILLING, SECURE INSPECTION OF INSTALLATION BY ENGINEER.
2. BACKFILL: INSTALL AND COMPACT ALL BACKFILL MATERIAL PER SPECIFICATIONS.
3. HYDRANT: DRY BARREL PER AWWA C502.
   A. PROVIDE AT LEAST 1 CUBIC YARD OF SEWER ROCK AROUND DRAIN HOLE AT BASE OF HYDRANT. PLACE TAR PAPER OR PLASTIC OVER SEWER ROCK TO PREVENT SILTING.
   B. PAINT FIRE HYDRANT RED PER SOUTH JORDAN CITY'S REQUIREMENTS.
   C. APPLY POLY-FM GREASE TO ALL BURIED METAL SURFACES. WRAP WITH 8 mil THICK POLYETHYLENE SHEET AND TAPE WRAP.
   D. ALL HYDRANTS NOT IN SERVICE SHALL BE BAGGED UNTIL WATER IS AVAILABLE
4. THRUST BLOCKS: REQUIRED FOR ALL CONNECTIONS INCLUDING FLANGED OR WELDED PIPE SYSTEMS.
5. PLASTIC WRAP: PRIOR TO POURING CONCRETE, APPLY POLY-FM GREASE AND WRAP PIPE SYSTEM AND FITTINGS WITH 8 mil THICK PLASTIC SHEET TO PREVENT BONDING OF CONCRETE TO PIPE SYSTEM AND FITTINGS.
6. PLACE FOUR (4) PROTECTIVE BOLLARDS AROUND HYDRANT IF DIRECTED BY BY SOUTH JORDAN CITY.

PREPARED BY:_____

SOUTH JORDAN
U T A H

SOUTH JORDAN CITY

DATE	REVISIONS	BY	DRAWN: / DATE	FIRE HYDRANT INSTALLATION WITH MAIN OUTSIDE THE ROADWAY	STANDARD DRAWING 3056

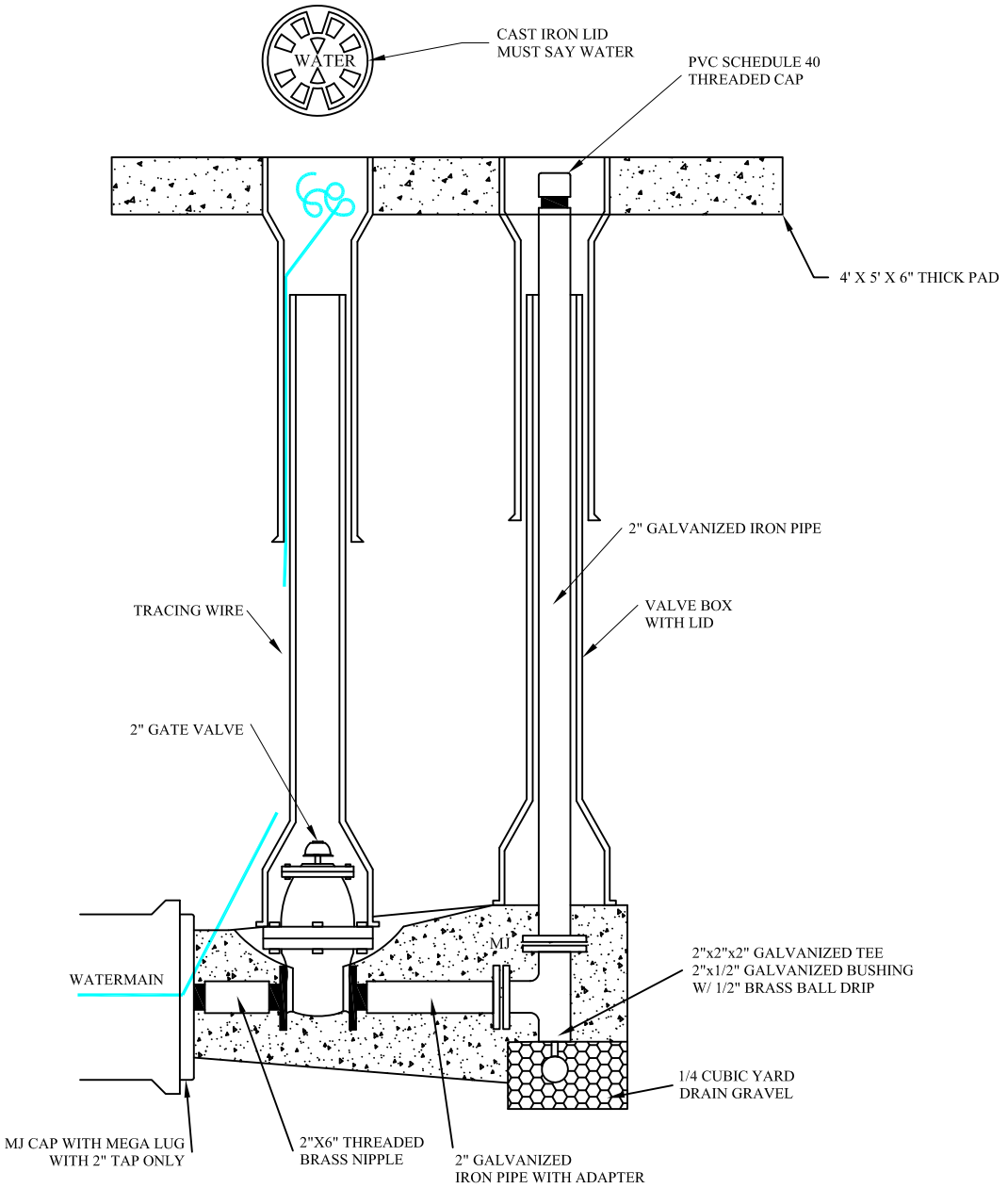

NOTES:

1. INSPECTION: PRIOR TO BACKFILLING AROUND THRUST BLOCK, SECURE INSPECTION OF INSTALLATION BY CITY ENGINEER.
2. BACKFILL: INSTALL AND COMPACT ALL BACKFILL MATERIAL PER SPECIFICATIONS.
3. CONCRETE: CLASS 2,000 MINIMUM. POUR CONCRETE AGAINST UNDISTURBED SOIL. THRUST BLOCK MUST MEET APWA.
4. TAPE: APPLY TAPE WRAP TO THE EXTERIOR OF ALL GALVANIZED PIPE PER AWWA C209
5. SPECIAL DESIGN: WATERMAINS 12" AND LARGER WILL REQUIRE SPECIAL WASHOUT ASSEMBLY DESIGN.
6. DRAINAGE: AFTER INSTALLATION OF WASHOUT VALVE ASSEMBLY, VERIFY THE WASHOUT VALVE RISER DRAINS TO GRAVEL.
7. WRAP ALL FOOTINGS PRIOR TO PLACEMENT OF THRUST BLOCKING

PREPARED BY: _____

SOUTH JORDAN UTAH

SOUTH JORDAN CITY

DATE	REVISIONS	BY	DRAWN:	WASHOUT VALVE ASSEMBLY	STANDARD DRAWING 3060
			DATE		

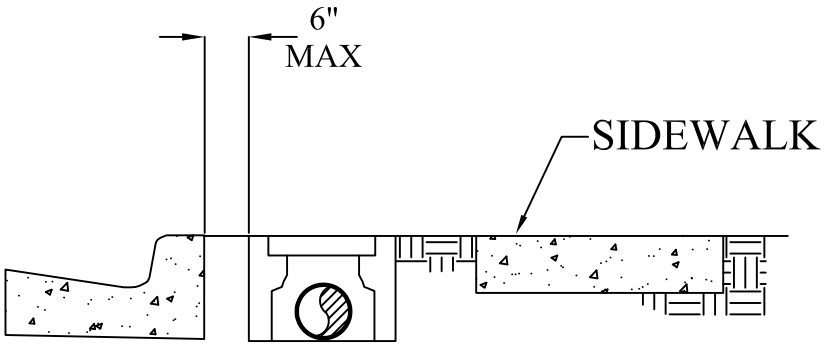

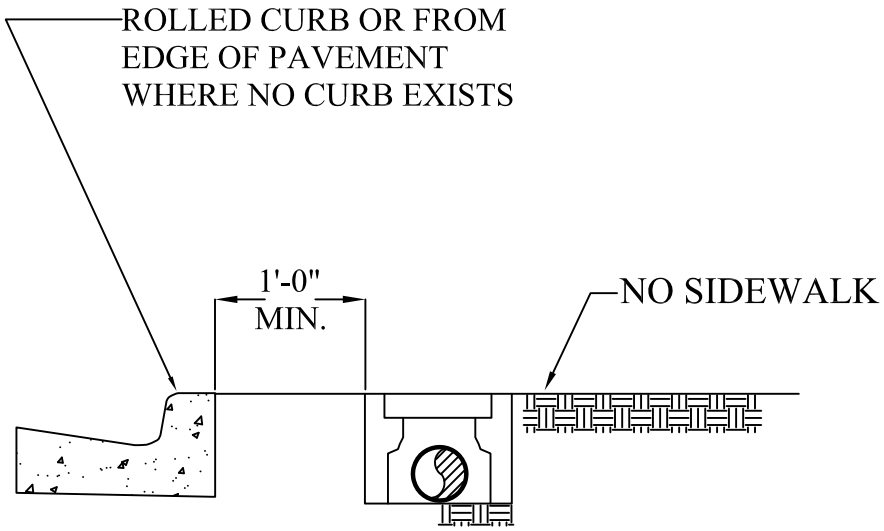

NOTES:

1. METER BOXES SHALL BE LOCATED WITHIN 6" FROM THE BACK OF CURB. LONGITUDINAL AXIS PERPINDICULAR TO AND DIRECTLY BEHIND CURB.
2. METER BOXES SHALL NOT BE LOCATED IN DRIVEWAYS
3. COMBINATION AIR RELEASE AND VACUUM VALVE ASSEMBLIES SHALL BE LOCATED BEHIND THE SIDEWALK BUT WITHIN THE PUBLIC SERVICES EASEMENTS (PSE)
4. NO CONCRETE SHALL BE INSTALLED WITHIN 2' OF THE WATER METER.

PREPARED BY: _____

SOUTH JORDAN CITY

DATE	REVISIONS	BY	DRAWN: / DATE	WATER METER LOCATION	STANDARD DRAWING 3065

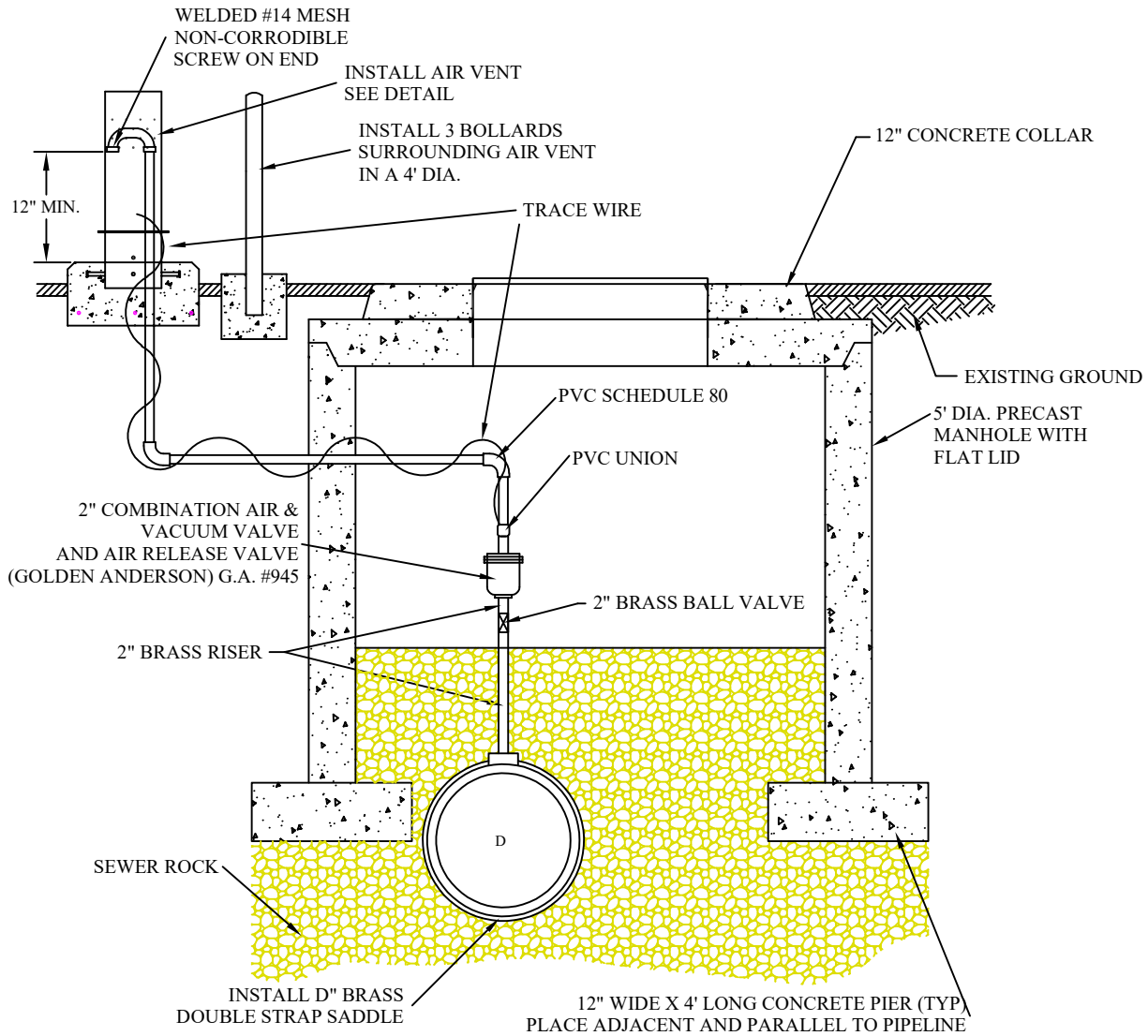

NOTES:

1. INSPECTION: PRIOR TO BACKFILLING AROUND THE ASSEMBLY, SECURE INSPECTION OF INSTALLATION BY ENGINEER.
2. BACKFILL: INSTALL AND COMPACT ALL BACKFILL MATERIAL PER SPECIFICATIONS.
3. CONCRETE: CLASS 4,000. APPLY A SEALING/CURING COMPOUND PER SPECIFICATIONS.
4. SMALL FITTINGS: PROVIDE BRASS FITTINGS AND NIPPLES IF NOT SPECIFIED OTHERWISE. DO NOT USE GALVANIZED MATERIALS BELOW DIELECTRIC UNION.

PREPARED BY: _____

SOUTH JORDAN
U T A H

SOUTH JORDAN CITY

DATE	REVISIONS	BY	DRAWN: / DATE	COMBINATION AIR VACUUM VALVE ASSEMLY	STANDARD DRAWING 3070

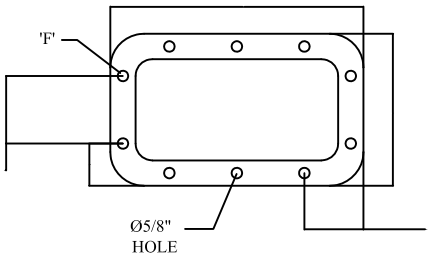

FLANGE DETAIL

ITEMS REMOVED FOR CLARITY, N.T.S.

		PARTS LIST
ITEM	QTY	DESCRIPTION
A	1	TS 12" x 6" x 1/4" x 2'-6"
B	1	TS 12" x 6" x 1/4" x 12"
C	1	1/4" PL - 6" x 1'-0"
D	2	1/4" PL - 9" x 1'-3"
E	4	Ø3/4" x 4" H.S.A.
F	10	Ø1/2" x 3" BREAKAWAY BOLTS

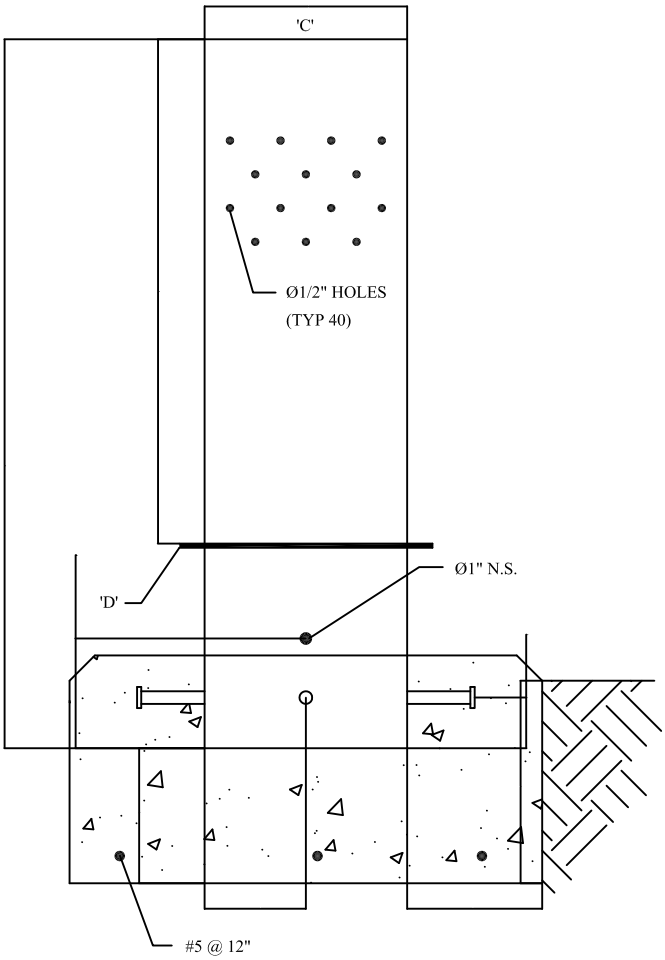

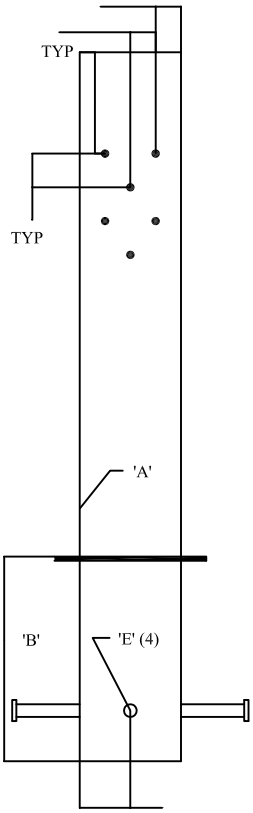

SIDE VIEW

N.T.S.

NOTES:

1. OPEN TO AIR-PLACE A NO. 14 MESH NON-CORRODIBLE SCREEN OVER THE OPEN END OF P.V.C. PIPE. ATTACH W/S.S. HOSE CLAMP.

2. HOT DIPPED GALVANIZED STEEL STAND PIPE FOR AIR VENT.

3. 1 ½" MIN. CHAMFER ALL AROUND CONCRETE BASE.

PREPARED BY:_____

SOUTH JORDAN

SOUTH JORDAN CITY

DATE	REVISIONS	BY	DRAWN: / DATE	AIR VENT DETAIL	STANDARD DRAWING 3075

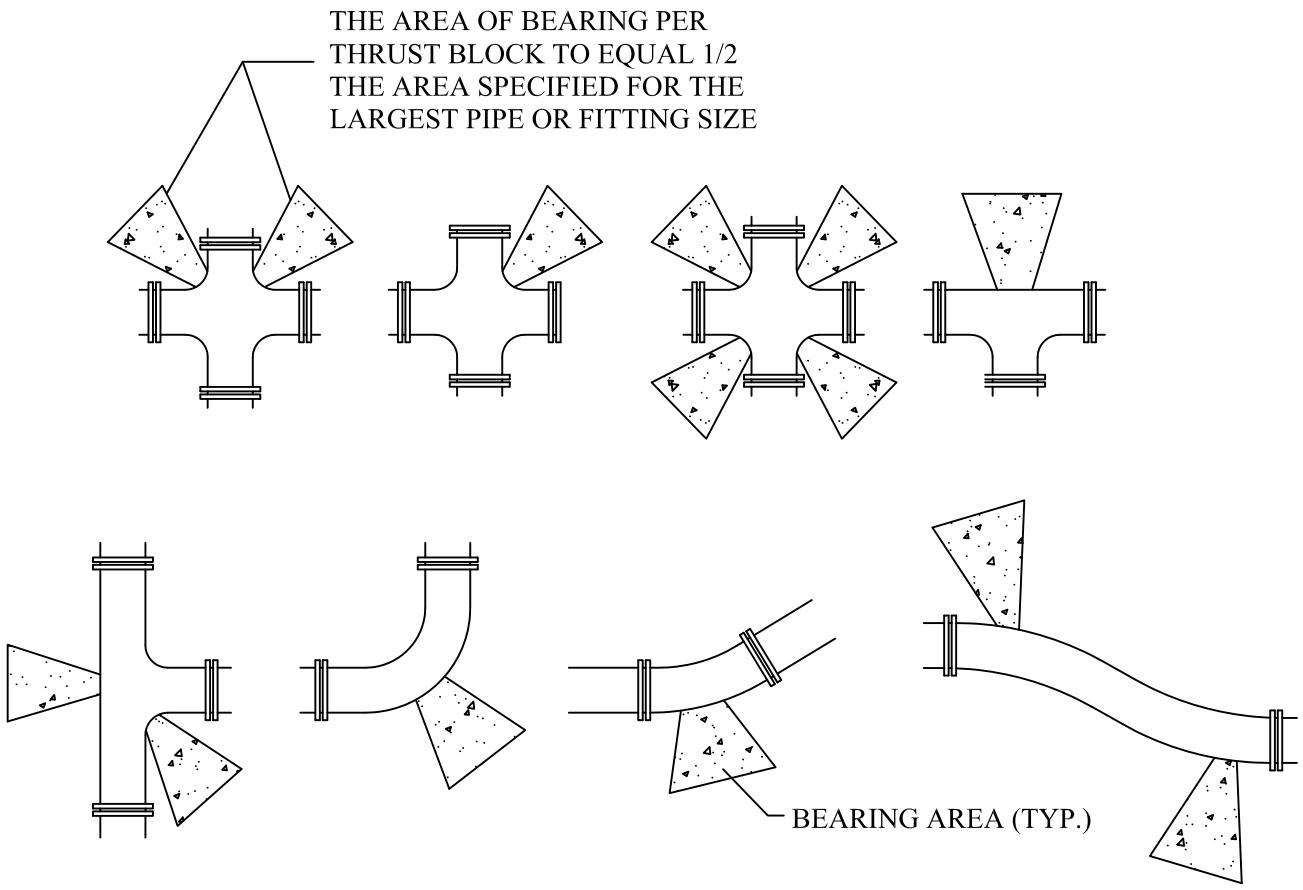

NOTES:

1. INSPECTION: PRIOR TO BACKFILLING AROUND THRUST BLOCK, SECURE INSPECTIONS OF INSTALLATION BY ENGINEER.
2. BACKFILL: INSTALL AND COMPACT ALL BACKFILL MATERIAL PER SPECIFICATIONS.
3. CONCRETE: CLASS 2,000 MINIMUM. POUR CONCRETE AGAINST UNDISTURBED SOIL.
4. PIPE JOINTS: DO NOT COVER WITH CONCRETE. LEAVE COMPLETELY ACCESSIBLE.
5. GREASE: APPLY POLY-FM GREASE TO ALL BURIED METAL SURFACES. WRAP WITH 8 MIL THICK POLYETHYLENE SHEET AND TAPE WRAP.
6. SPECIAL CONSTRUCTION REQUIREMENTS:
   A. THRUST DESIGN FOR PIPE SIZES OR CONFIGURATIONS NOT SHOWN REQUIRE SPECIAL DESIGN.
   B. BEARING AREAS, VOLUMES, AND SPECIAL THRUST BLOCKING DETAILS SHOWN ON DRAWINGS TAKE PRECEDENCE OVER THIS PLAN.
   C. REINFORCING STEEL BARS TO BE EPOXY COATED AT LEAST 15 MILS THICK. MINIMUM STRESS YIELD STRENGTH OF TIE DOWN BARS IS 70,000 PSI.
   D. LOCKING RESTRAINT DEVICES MAY BE USED IN CONJUNCTION WITH CONCRETE THRUST BLOCKING (AT OPTION OF ENGINEER).
   E. RESTRAINT SIZING IS BASED UPON A MAXIMUM OPERATING PRESSURE OF 150 PSI AND A TEST PRESSURE OF 200 PSI, AND A MINIMUM SOIL BEARING STRESS OF 2,000 PSF. OPERATING PRESSURES IN EXCESS OF 150 PSI OR SOILS WITH LESS THAN 2,000 POUND BEARING STRENGTH WILL REQUIRE SPECIAL DESIGN.
   F. CONCRETE MUST BE ALLOWED TO CURE IN THRUST RESTRAINTS FOR 5 DAYS PRIOR TO PRESSURIZING WATER LINES OR HAVE ADDITIONAL APPROVED THRUST RESTRAINTS INSTALLED PRIOR TO PRESSURIZING THE WATER LINE.
7. MEGALUGS REQUIRED ON ALL FITTINGS

MINIMUM BEARING AREA IN SQ. FT.					
SIZE OF PIPE	TEES, VALVES DEAD ENDS	90° BENDS	45° BENDS	22 1/2° BENDS	11 1/4° BENDS
4"	2	3	2	2	2
6"	4	5.5	3	1.5	1
8"	6.5	9.5	5	2.75	1.5
12"	14	20	11	5.5	3
14"	19	26.5	14.5	7.5	4
16"	24	34	18.5	9.5	6
20"	27	52	28.5	14.5	16
24"	53	74	41	21	53
30"	81	114	62	32	16

PREPARED BY: _____

SOUTH JORDAN CITY

DATE	REVISIONS	BY	DRAWN: / DATE	DIRECT BEARING THRUST BLOCKS	STANDARD DRAWING 3080

TYPE 'A' RESTRAINT

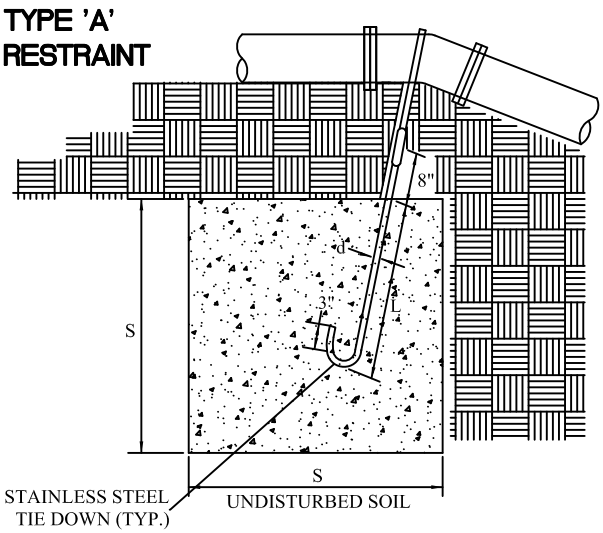

TYPE 'B' RESTRAINT

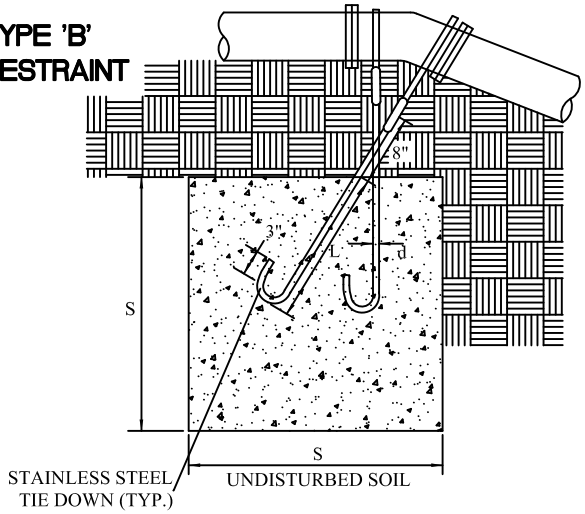

TYPE 'A' RESTRAINT

FOR 11 1/4°-22 1/2° VERTICAL BENDS

TABLE OF DIMENSIONS

	VB		S	d	L
PIPE SIZE NOMIN. DIAMETER - INCH	VERTICAL BEND DEGREES	NO. OF CU FT. OF CONC. BLOCKING	SIDE OF CUBE FEET	DIAMETER OF SHACK OR REBAR RODS - INCH	DEPTH OF RODS IN CONCRETE FT.
4"	11 1/4°	8	2.O	5/8"	1.5
	22 1/2°	15.6	2.5	5/8"	2.O
6"	11 1/4°	15.6	2.5	5/8"	2.O
	22 1/2°	34.3	3.25	5/8"	2.O
8"	11 1/4°	27	3.O	5/8"	2.O
	22 1/2°	64	4.O	5/8"	2.O
12"	11 1/4°	64	4.O	3/4"	2.O
	22 1/2°	125	5.O	3/4"	3.O
16"	11 1/4°	1O7	4.25	7/8"	3.O
	22 1/2°	216	6.O	7/8"	4.O
2O"	11 1/4°	138	5.17	1"	3.5
	22 1/2°	334	6.94	1"	4.O
24"	11 1/4°	24O	6.22	1"	4.O
	22 1/2°	476	7.81	1"	4.O
3O"	11 1/4°	369	7.17	1"	4.O
	22 1/2°	733	9.O2	1"	4.O

TYPE 'B' RESTRAINT

FOR 45° VERTICAL BENDS

TABLE OF DIMENSIONS

	VB		S	d	L
PIPE SIZE NOMIN. DIAMETER - INCH	VERTICAL BEND DEGREES	NO. OF CU C.Y. OF CONC. BLOCKING	SIDE OF CUBE FEET	DIAMETER OF SHACK OR REBAR RODS - INCH	DEPTH OF RODS IN CONCRETE FT.
4"	45°	1	3.O	5/8"	2.O
				5/8"	
6"	45°	2.37	4.O	5/8"	2.5
				5/8"	
8"	45°	3.97	4.75	5/8"	2.O
				5/8"	
12"	45°	9.O4	6.25	5/8"	4.O
				5/8"	
16"	45°	17.24	7.75	3/4"	4.O
				3/4"	
2O"	45°	26.52	8.95	3/4"	4.O
				3/4"	
24"	45°	37.82	1O.O7	3/4"	4.O
				3/4"	
3O"	45°	58.26	11.63	3/4"	4.O
				3/4"	

PREPARED BY: _____

SOUTH JORDAN
U T A H

SOUTH JORDAN CITY

DATE	REVISIONS	BY

DRAWN:

DATE

TIE DOWN THRUST RESTRAINTS

STANDARD DRAWING

3085

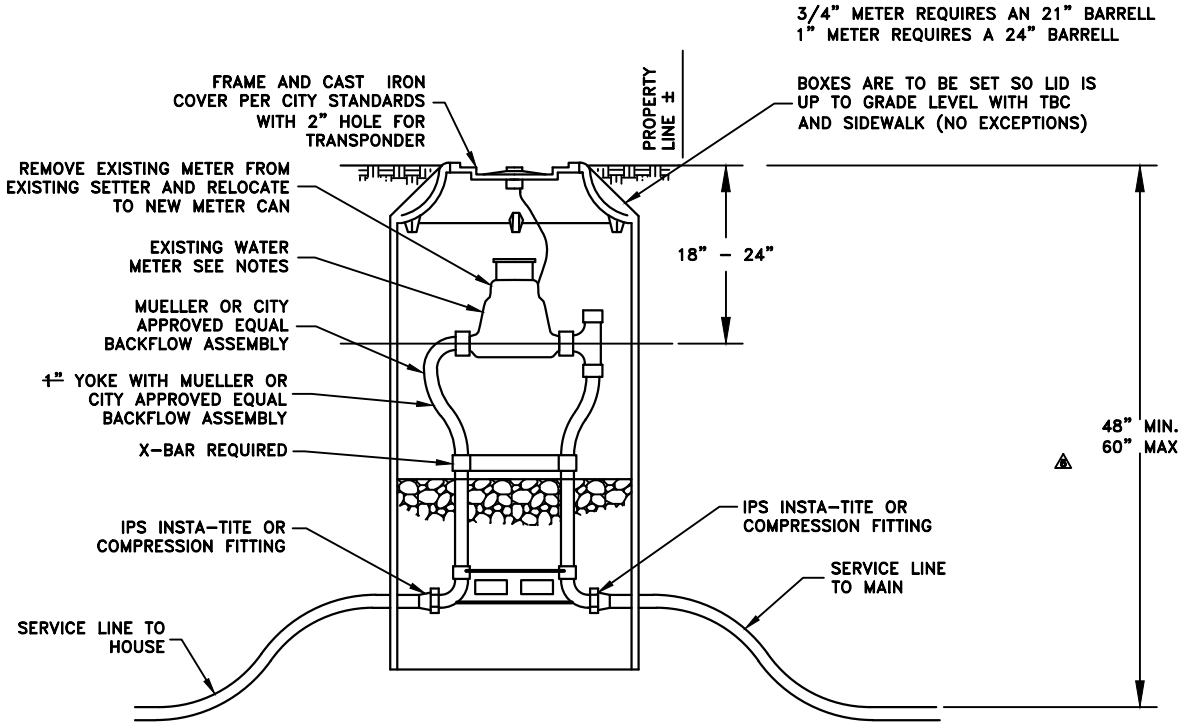

5/8 x 3/4" SETTER FORD VBHC72-21WR-MM-33NL
1" SETTER FORD VBHC74-21WRT-MM-44NL
1" x 3/4" SETTER MUELLER B2434R-6AN

METER SERVICE
N.T.S.

COMPRESSION FITTINGS ARE EITHER:
FORD QUICK JOINTS OR
MUELLER 110 COMPRESSION

NOTES:

1. INSPECTION: PRIOR TO BACKFILLING AROUND THE METER BOX, SECURE INSPECTION OF INSTALLATION BY ENGINEER.

2. BACKFILLING: INSTALL ALL BACKFILL MATERIAL PER APWA SECTION 02320 IN LIFTS NOT EXCEEDING 6 INCHES AFTER COMPACTION. COMPACT EACH LIFT TO A MINUMUM RELATIVE DENSITY OF 96 PERCENT.

3. PLACEMENT:
   A. DO NOT INSTALL METERS IN HARD SURFACE 2 FEET MINIMUM FROM LID.
   B. IN NEW CONSTRUCTION, INSTALL METER AT CENTER OF LOT OF PER SOUTH JORDAN CITY REQUIREMENTS.
   C. ALL METERS ARE TO BE INSTALLED IN THE PARK STRIP OR WITHIN 4 FEET OF THE PROPERTY LINE (STREET SIDE) AND OUTSIDE OF HARD SURFACE.

PREPARED BY:_____

SOUTH JORDAN

SOUTH JORDAN CITY

		DRAWN:	3/4" AND 1" METER SERVICE	STANDARD DRAWING 3090
		DATE		
	BY			

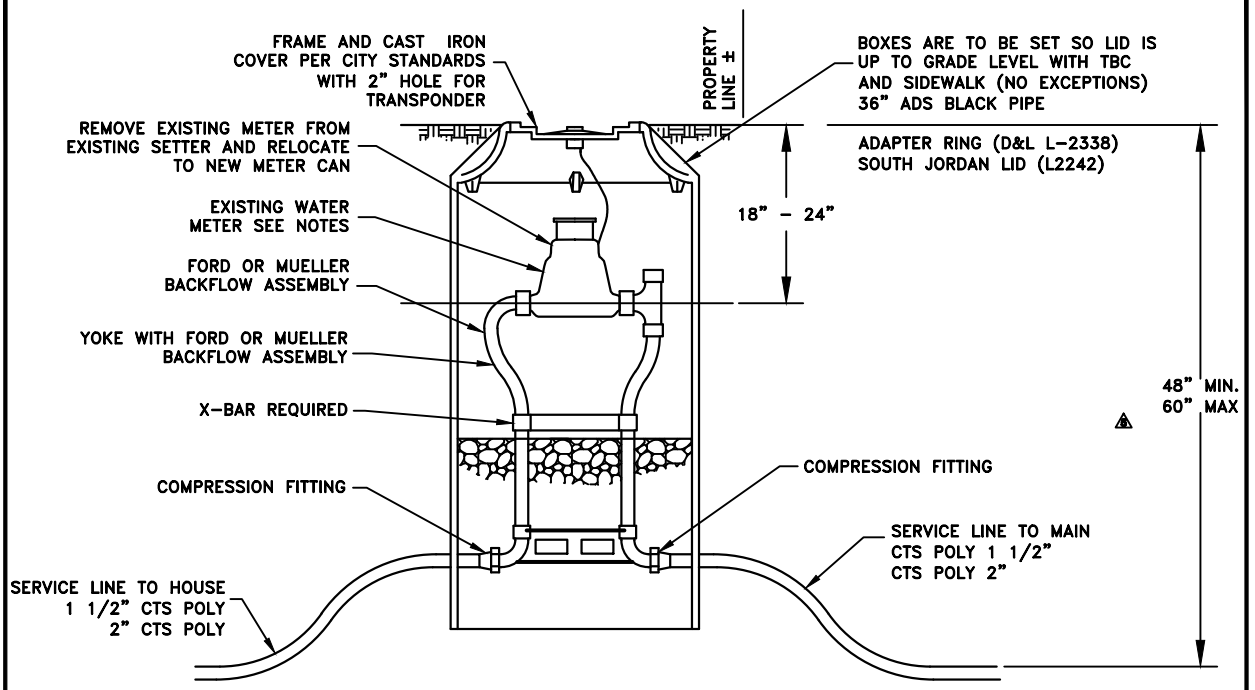

(DUAL CHECK F/ SETTERS)
(BALL ANGLE METER STOPS)

COMPRESSION FITTINGS ARE EITHER:
FORD QUICK JOINTS OR
MUELLER 110 COMPRESSION

METER SERVICE

N.T.S.

SETTER LESS BY-PASS AND NON LEADED
FORD 1 1/2" VBHH76-18-1166NL
FORD 2" VBHH77-18-1177NL
MUELLER 2" B2422-2N
MUELLER 1 1/2" B2422-2N

NOTES:

1. INSPECTION: PRIOR TO BACKFILLING AROUND THE METER BOX, SECURE INSPECTION OF INSTALLATION BY ENGINEER.

2. BACKFILLING: INSTALL ALL BACKFILL MATERIAL PER APWA SECTION 02320 IN LIFTS NOT EXCEEDING 6 INCHES AFTER COMPACTION. COMPACT EACH LIFT TO A MINUMUM RELATIVE DENSITY OF 96 PERCENT.

3. PLACEMENT:
   A. DO NOT INSTALL METERS IN HARD SURFACE 2 FEET MINIMUM FROM LID.
   B. IN NEW CONSTRUCTION, INSTALL METER AT CENTER OF LOT OF PER SOUTH JORDAN CITY REQUIREMENTS.
   C. ALL METERS ARE TO BE INSTALLED IN THE PARK STRIP OR WITHIN 4 FEET OF THE PROPERTY LINE (STREET SIDE) AND OUTSIDE OF HARD SURFACE.

PREPARED BY:

SOUTH JORDAN CITY

		DRAWN:	1 1/2" AND 2" METER SERVICE	STANDARD DRAWING 3091
		DATE		
	BY			

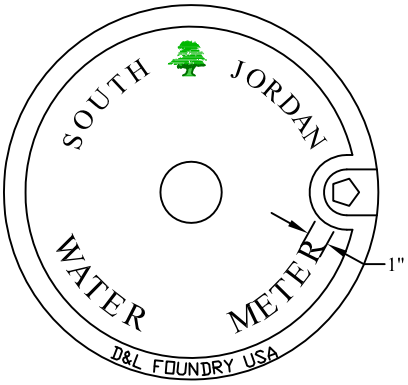

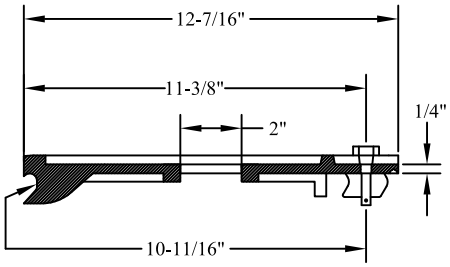

SECTION A-A

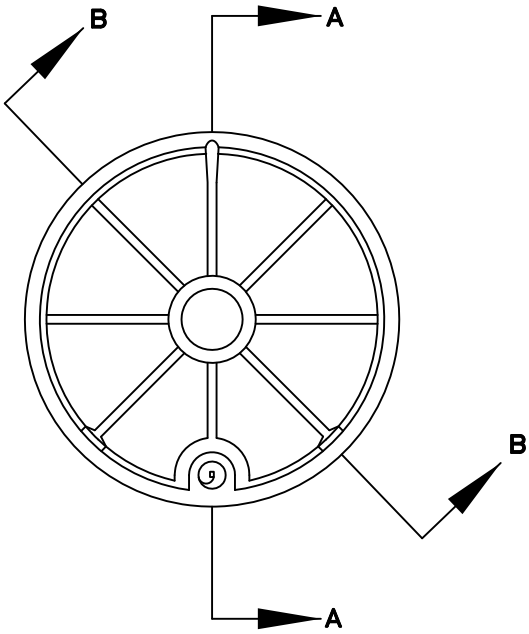

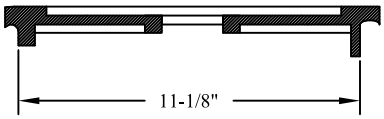

SECTION B-B

D&L FOUNDRY & SUPPLY
MODEL #L-2240-14
13 LBS.

WATER METER COVER

N.T.S.

PREPARED BY: _____

SOUTH JORDAN CITY

		DRAWN:	METER SERVICE	STANDARD DRAWING 3092
		DATE		
	BY			

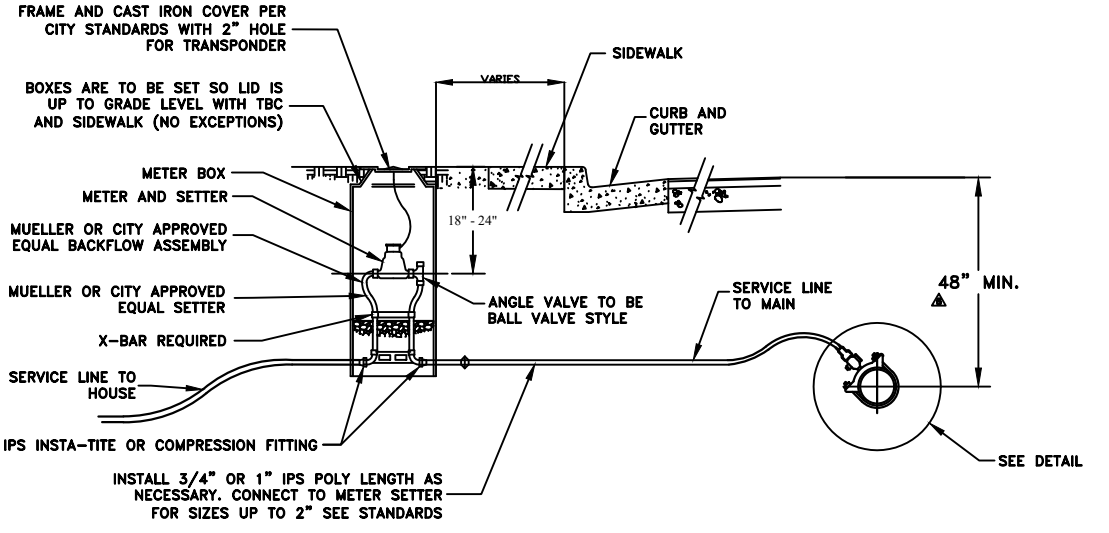

WATER SERVICE ADJUSTMENTS

NOTES:

1. FITTINGS – PROVIDE BRASS FITTINGS AND NIPPLES ON ALL SERVICE LINE CONNECTIONS. DO NOT USE GALVANIZED MATERIALS
2. INSPECTION: PRIOR TO BACKFILLING AROUND THE METER BOX, SECURE INSPECTION OF INSTALLATION BY ENGINEER.
3. BACKFILLING: INSTALL ALL BACKFILL MATERIAL PER APWA SECTION 02320 IN LIFTS NOT EXCEEDING 6 INCHES AFTER COMPACTION. COMPACT EACH LIFT TO A MINIMUM RELATIVE DENSITY OF 96 PERCENT.
4. PLACEMENT:
   A. DO NOT INSTALL METERS IN HARD SURFACE 2 FEET MINIMUM FROM LID.
   B. IN NEW CONSTRUCTION, INSTALL METER AT CENTER OF LOT OF PER SOUTH JORDAN CITY REQUIREMENTS.
   C. ALL METERS ARE TO BE INSTALLED IN THE PARK STRIP OR WITHIN 4 FEET OF THE PROPERTY LINE (STREET SIDE) AND OUTSIDE OF HARD SURFACE.

TYPICAL CULINARY WATER SERVICE CONNECTION

N.T.S.

NOTES:

1. INSPECTION – PRIOR TO BACKFILLING AROUND TAPS, SECURE INSPECTION OF INSTALLATION BY SOUTH JORDAN WATER DEPARTMENT
2. BACKFILL – INSTALL AND COMPACT ALL BACKFILL MATERIAL PER CITY STANDARD
3. TAPPING – PLACE TAPS A MINIMUM OF 36" APART. USE A TAPPING TOOL WHICH IS SIZED CORRESPONDING TO THE SIZE OF THE SERVICE LINE TO BE INSTALLED. NO TAPS WITHIN 36" OF END OF ANY PIPE.

TAPE – TEFLON TAPE OR PIPE DOPE IS REQUIRED ON ALL TAPS

COMPRESSION FITTINGS ARE EITHER:
FORD QUICK JOINTS OR
MUELLER 110 COMPRESSION

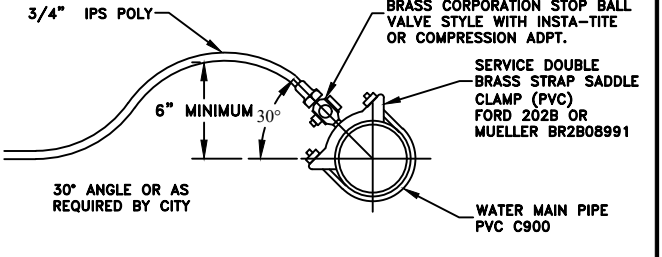

SERVICE TAPS

N.T.S.

PREPARED BY: _____

SOUTH JORDAN

SOUTH JORDAN CITY

DATE	REVISIONS	BY	DRAWN: / DATE	3/4" - 2" WATER METER PLAN SERVICE INSTALLATION	STANDARD DRAWING 3095

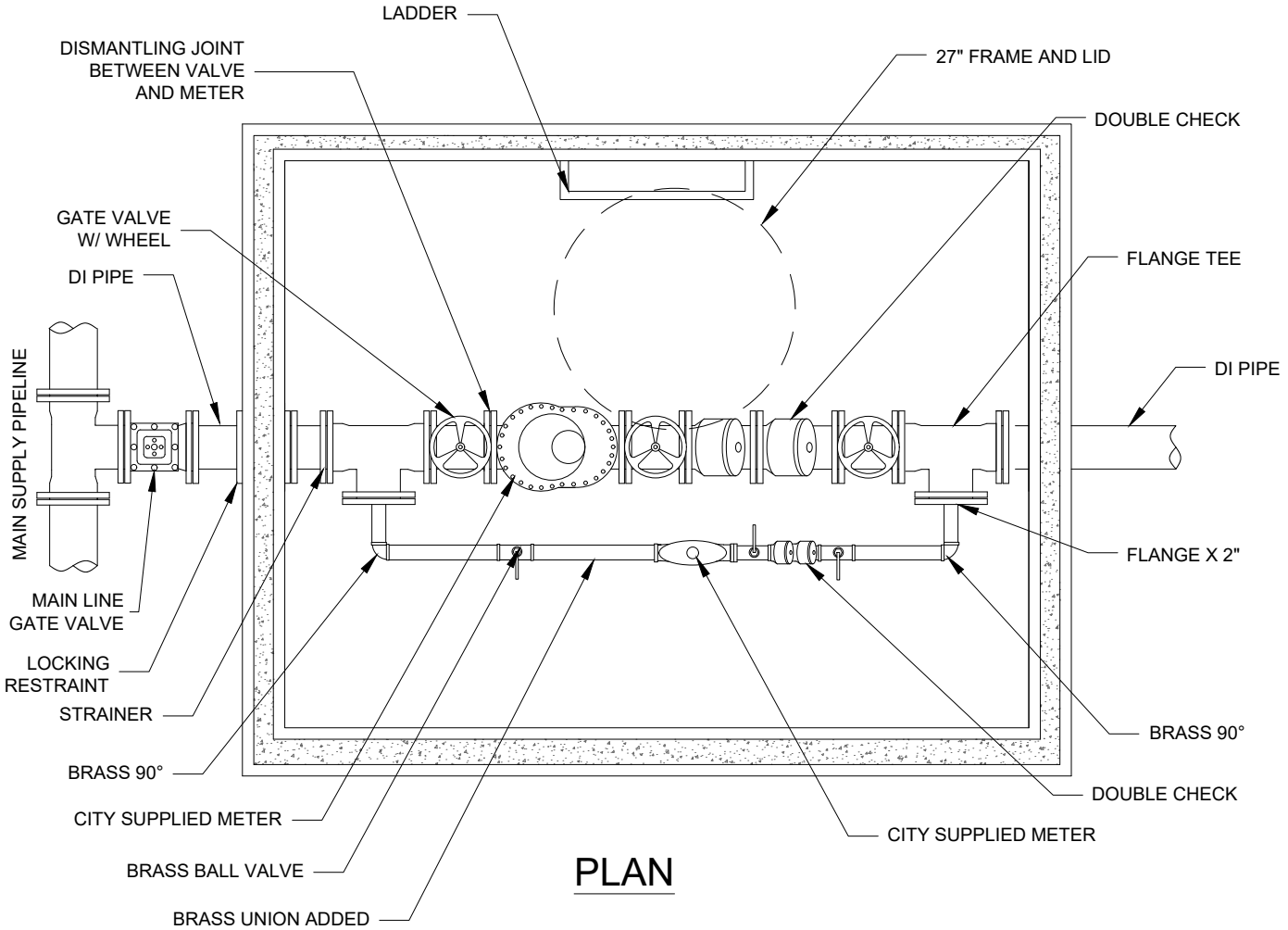

PLAN

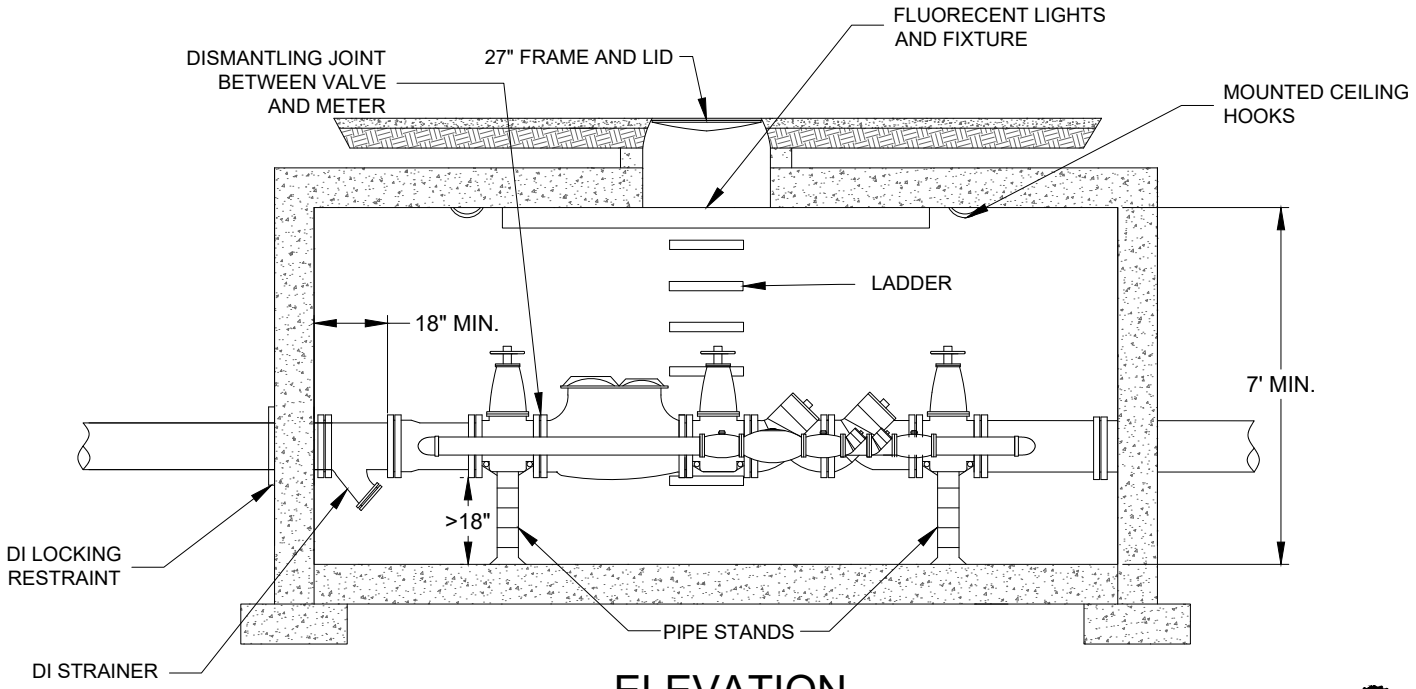

ELEVATION

PREPARED BY: _____

SOUTH JORDAN UTAH

SOUTH JORDAN CITY

DATE	REVISIONS	BY	DRAWN: AP	3"- 8" WATER VAULT DETAIL	STANDARD DRAWING 3100
			DATE 10/08		

MODEL: ECLIPSE 88ss

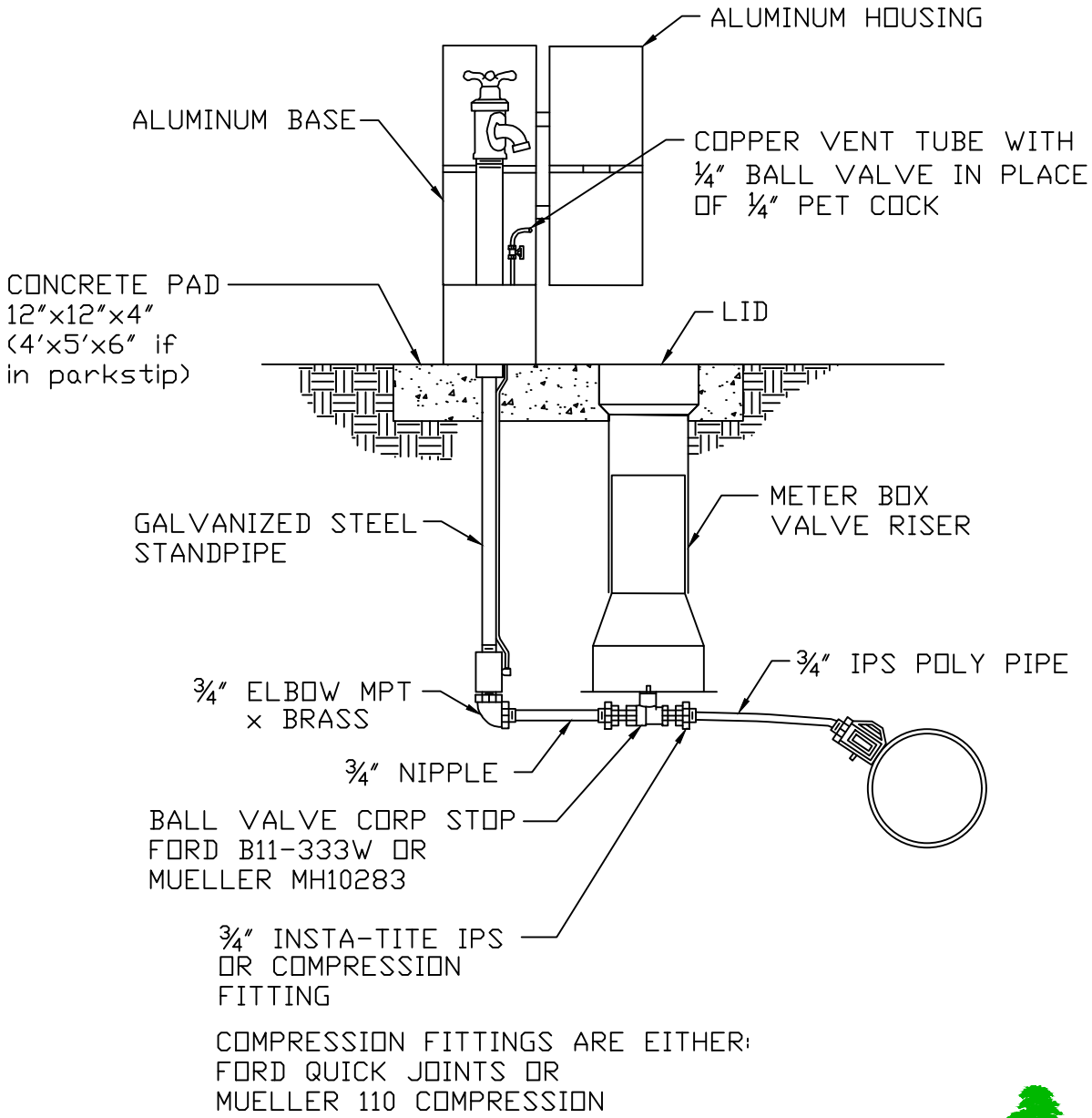

COMPRESSION FITTINGS ARE EITHER:
FORD QUICK JOINTS OR
MUELLER 110 COMPRESSION

PREPARED BY: _____

SOUTH JORDAN CITY

DATE	REVISIONS	BY	DRAWN: KS / DATE 1/12	SAMPLING TAP FOR RESIDENTIAL SUBDIVISIONS	STANDARD DRAWING 3110

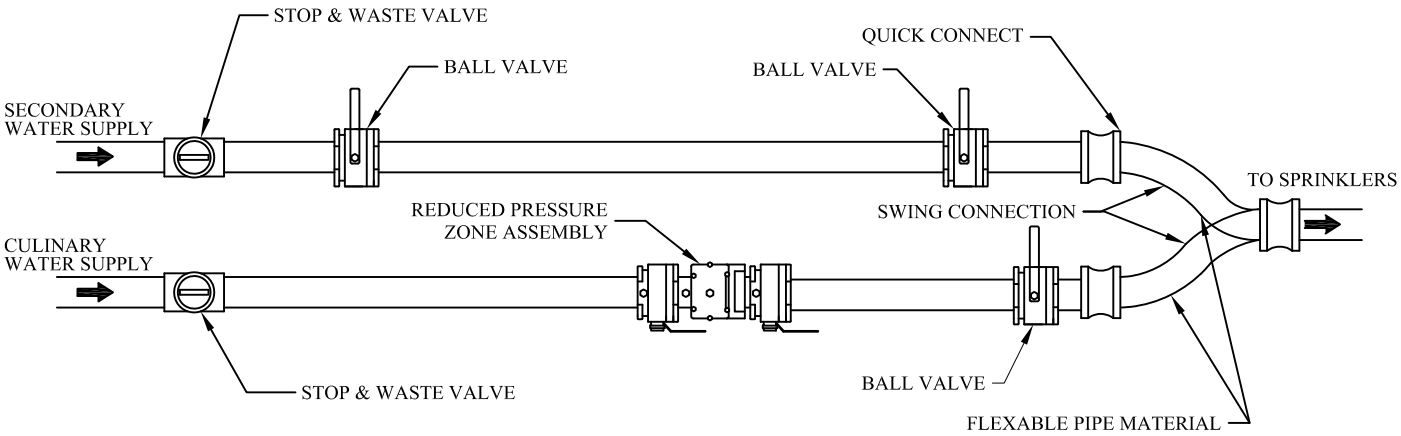

PLAN VIEW

NOT TO SCALE

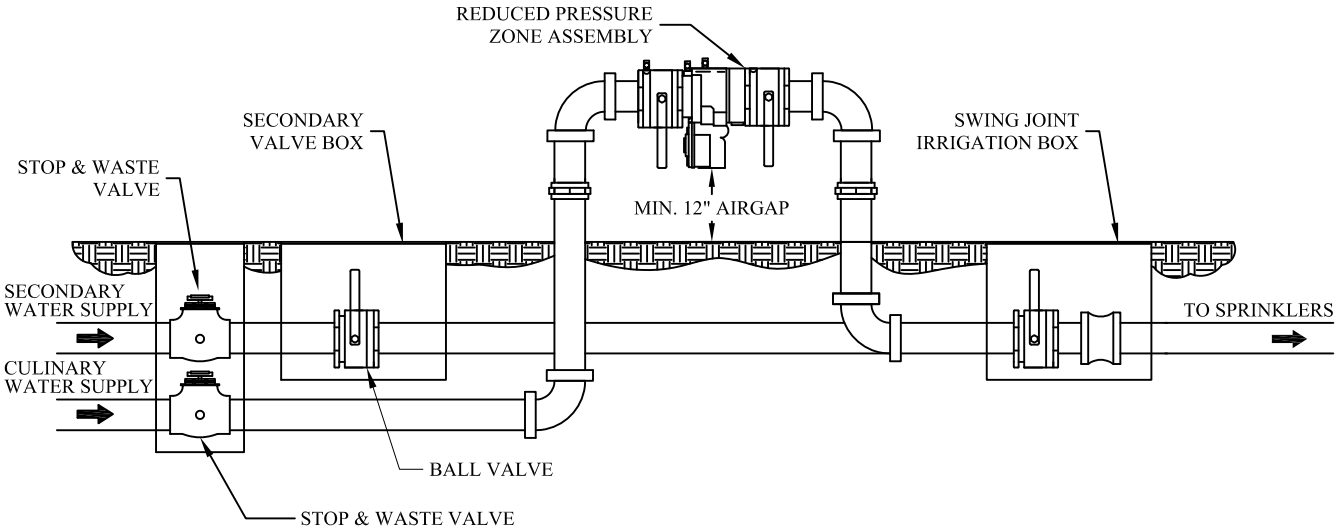

PROFILE VIEW

NOT TO SCALE

NOTES:

1. THE SWING CONNECTION IS INSTALLED SO THAT EITHER THE SECONDARY IRRIGATION WATER OR THE CULINARY WATER IS CONNECTED AND FEEDING THE SPRINKLER SYSTEM AT THE ONE TIME, NEVER BOTH.
2. THE REDUCED PRESSURE ZONE ASSEMBLY MUST BE LOCATED AT A MINIMUM OF 12" FROM WALL, FENCE OR OTHER OBSTACLE.
3. THE REDUCED PRESSURE ZONE ASSEMBLY MUST BE LOCATED AT A MINIMUM OF 12" ABOVE GRADE (NOT ALLOWED IN A PIT BELOW GRADE).
4. THE REDUCED PRESSURE ZONE ASSEMBLY MUST BE TESTED BY A CERTIFIED BACKFLOW TECHNICIAN ON AN ANNUAL BASIS.

SOUTH JORDAN
UTAH

SOUTH JORDAN CITY

DATE	REVISIONS	BY	DRAWN: KS DATE: 2/06	BACKFLOW PREVENTION DEVICE IRRIGATION CONNECTION	STANDARD DRAWING 2001

A-1180

with universal hole

SOUTH JORDAN
UTAH

Water Manhole Cover

(Platen-bottom cover)

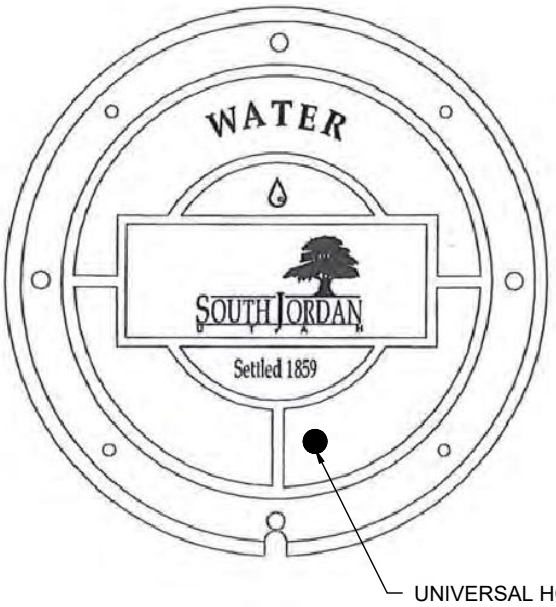

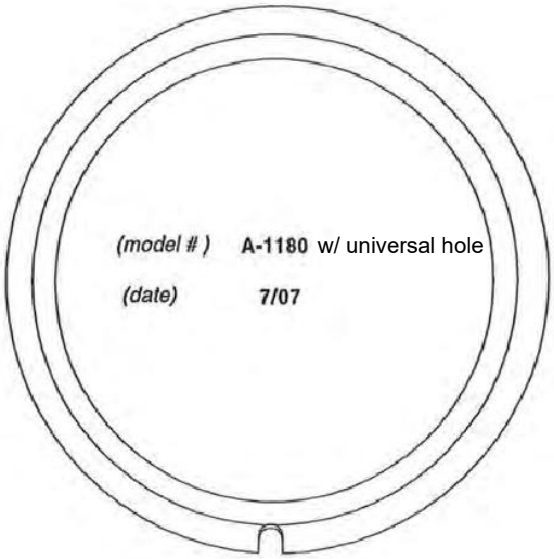

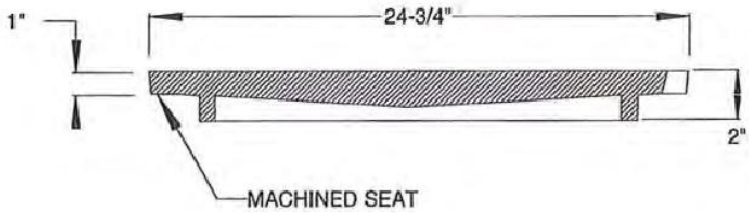

COVER EXCEEDS A COMPRESSION TEST OF UP TO 50,000 LBS.

CAST IRON conforms to ASTM A-48-93 Class 35B Meets H-20 Wheel Loading	**D&L model No. A-1180** with universal hole Made in Moses Lake, WA. USA	**D&L Foundry & Supply**
Designation: A-1180 / Date: July 2007	Prepared by: Jesse Walter D&L Foundry & Supply Inc. (not to scale)	CA Sales: (707) 557-4525 Fax: (707) 557-4655 UT Sales: (801) 785-5015 Fax: (801) 785-0835 WA Sales: (509) 765-7952 Fax: (509) 765-8124

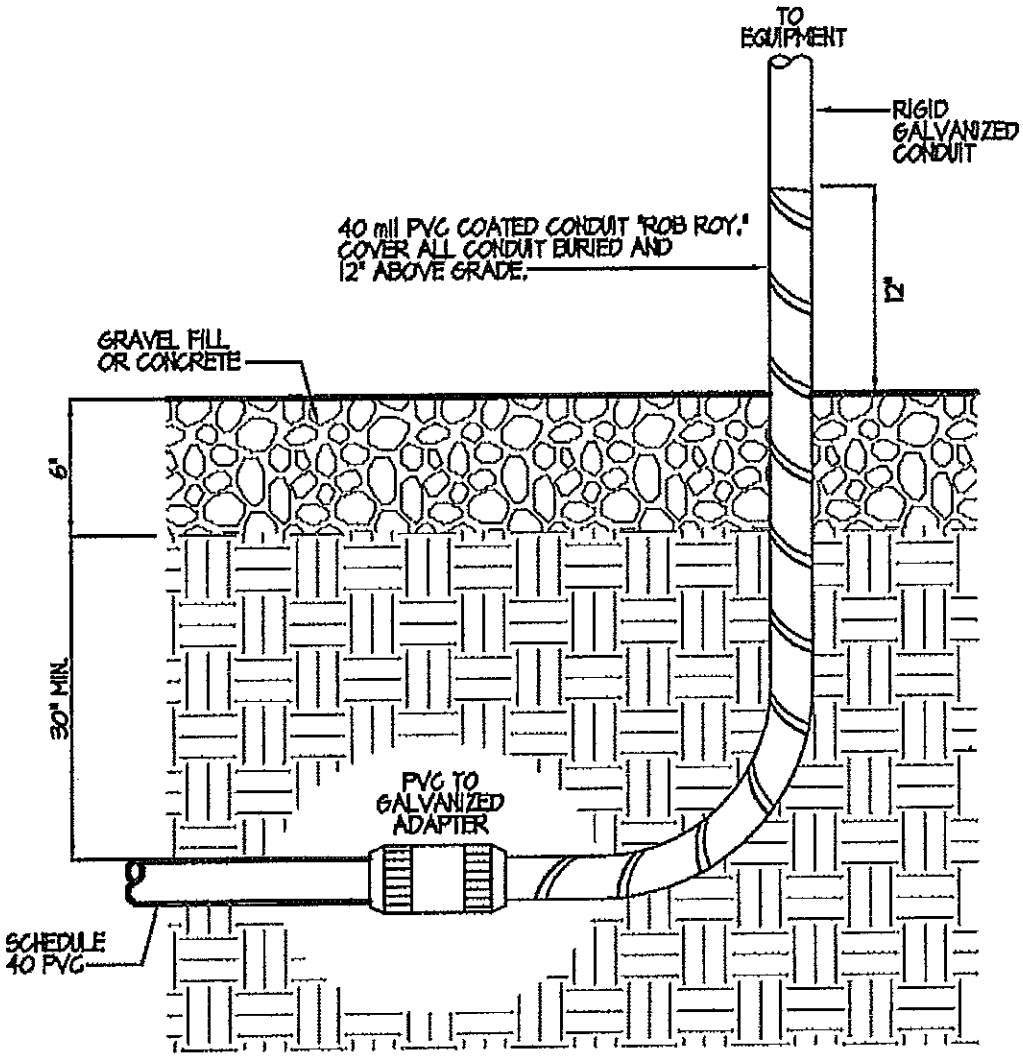

CONDUIT TERMINATION UNDER EQUIPMENT (8 / E-2)

SCALE: NONE

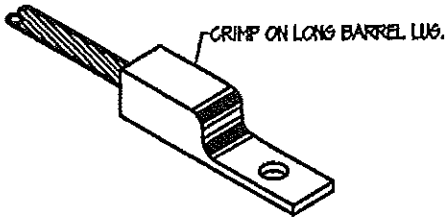

BONDING LUG (4 / E-2)

SCALE: NONE

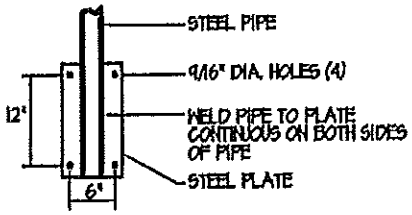

MAST ANCHOR DETAIL (1 / E-2)

SCALE: NONE

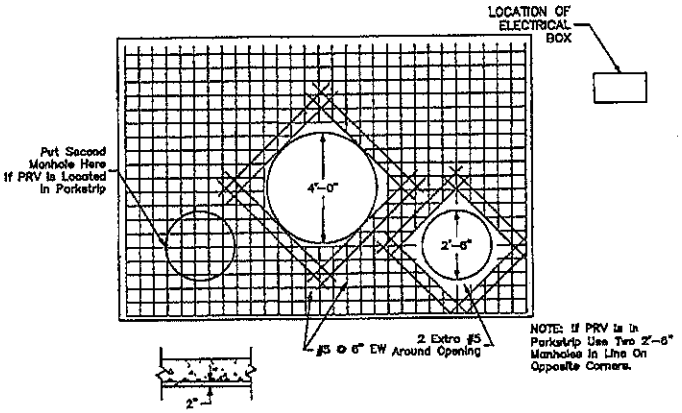

1 REBAR TOP SLAB (ROADWAY)
Not to Scale

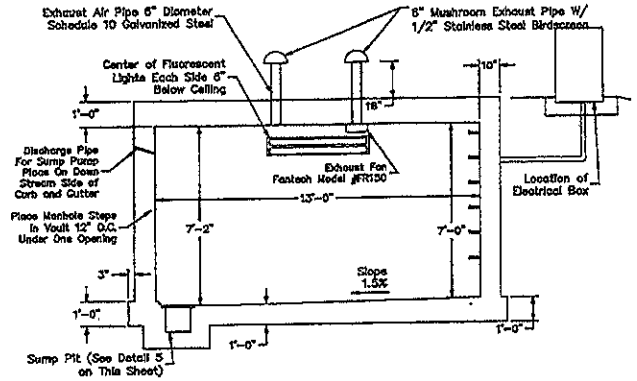

6 PRV VAULT FRONT SECTION
Not to Scale

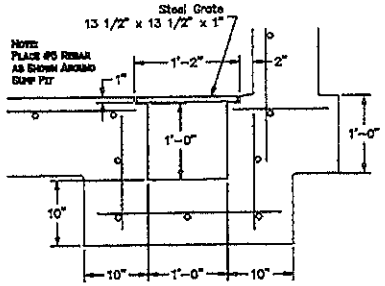

A-A SUMP SECTION
Not to Scale

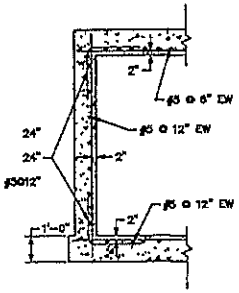

2 REBAR IN WALL
Not to Scale

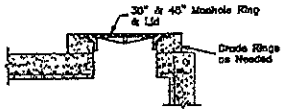

8 VAULT ACCESS
Not to Scale

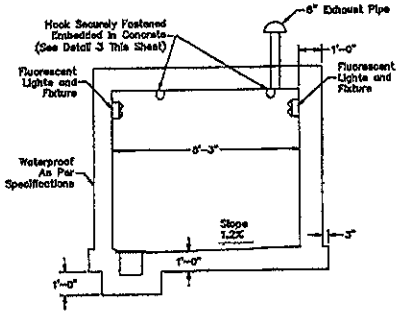

9 PRV VAULT END SECTION
Not to Scale

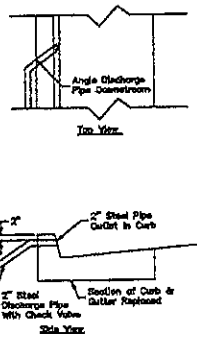

7 SUMP PUMP DISCHARGE
To Curb & Gutter
Not to Scale

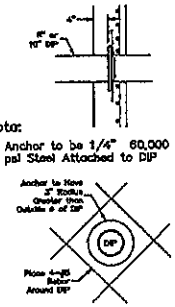

10 WALL ANCHOR DETAIL
Not to Scale

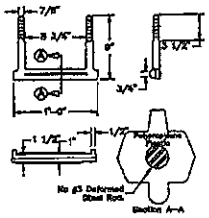

4 STEPS DETAIL
Not to Scale

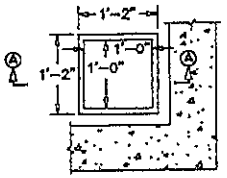

5 SUMP TOP VIEW
Not to Scale

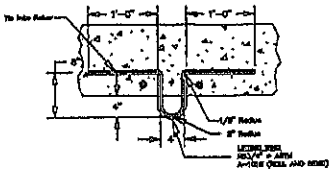

3 HOOK
Not to Scale

SOUTH JORDAN
U T A H

SOUTH JORDAN CITY
PRV VAULT DETALS

SIZE 10" OR SMALLER	DWG NO.	REV
SCALE		SHEET 1/3

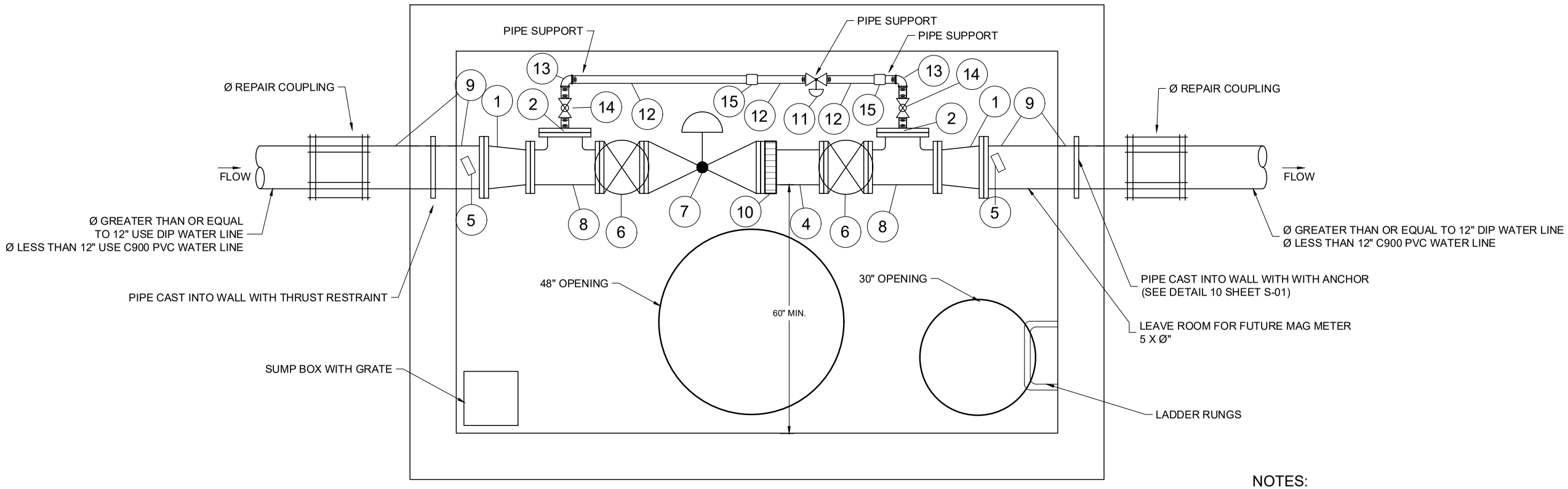

TOP VIEW

NOTES:

1. Clay 90-01 Epoxy Coated With Valve Position Indicator X 101.
2. Pipe or PRV Stands are Required Under All PRV's, All Tees and All Reducers. Also in Locations Shown. Stands Shall Be "Standon Pipe Supports" or an Approved Equal. (See Detail on Sheet DT-06)
3. Pressure Gage Shall Be McDaniel or Approved Equal.

PRESSURE REDUCING VALVE INSTALLATION

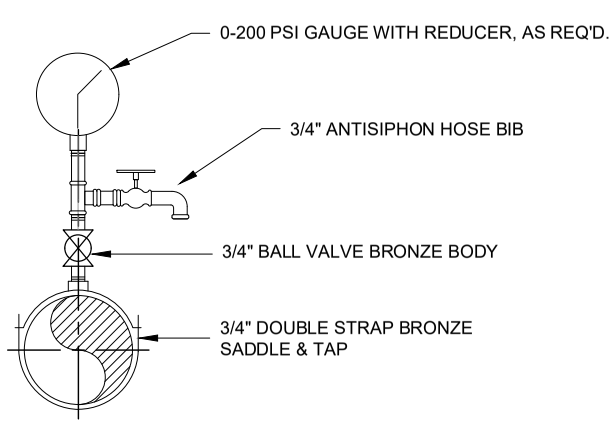

11 PRESSURE GAUGE ASSEMBLY
Not to Scale

1. Ø" x 8" DI Reducer & Stand for PRV
2. 8" Blind Flange w/ 2½" Female Tap
4. 8" Epoxy Coated Steel Spool, flg x flg
5. 0-200 psi Liquid Filled Pressure Gage (See Detail 11)
6. 8" Gate Valve w/ handwheel & Stand, flg x flg
7. 8" Pressure Reducing Valves & Stands (See Notes)
8. 8" DI Tee & Stand, flg x flg x flg
9. Ø" Di Pipe, flg x PE
10. Flange Adapter Coupling
11. 2½" Pressure Reducing Valve & Support, See Note 1
12. 2½" GI Pipe, MPT x MPT
13. 2½" GI 90° Elbow, FPT x FPT
14. 2½" FPT Ball Valve
15. 2½" Union Coupling

SOUTH JORDAN
UTAH
1600 Towne Center Drive / South Jordan, UT 84095
Telephone: (801) 254-3742 / Fax: (801) 253-5235

SOUTH JORDAN CITY
PRV VAULT DETALS

SIZE	DWG NO.	REV
10" OR SMALLER		
SCALE		SHEET 2/3

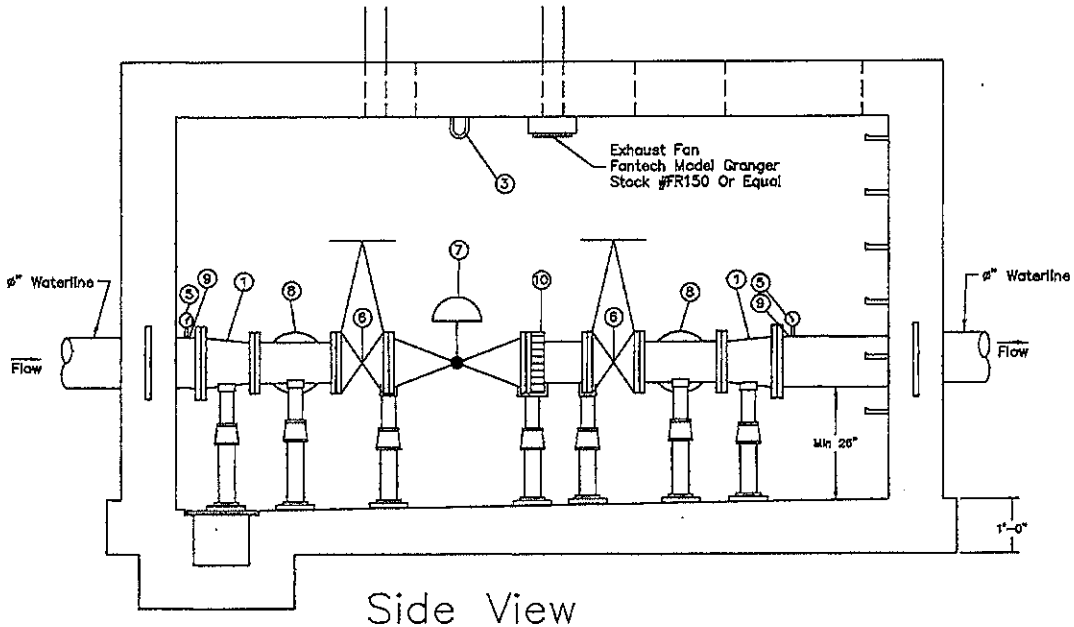

Side View

PRESSURE REDUCING VALVE INSTALLATION

1. ø" x 8" DI Reducer & Stands for PRV #15
3. Hook (2 typ.) One Over PRV (See Detail 3 on Sheet S-01)
4. 8" Epoxy Coated Steel Spool, flg x flg
5. 0-200 psi Liquid Filled Pressure Gage (see Detail 11)
6. 8" Gate Valve w/ handwheel & Stand, flg x flg
7. 8" Pressure Reducing Valves & Stands (See Notes)
8. 8" DI Tee & Stand, flg x flg x flg
9. ø" DI Pipe, flg x PE For PRV
10. Flange Adapter Coupling

NOTES:

1. Clay 90-01 Epoxy Coated With Valve Position Indicator X 101.
2. Place Standon Model S92 Pipe Saddle Supports or Approved Equal Under all Tees.
3. Place Standon Model S96 or S89 Flange Saddle Supports or Approved Equal Under all PRV's.
4. Place Standon Model S96 Flanged Saddle Supports or Approved Equal Under all Valves.
5. Pressure Gage Shall Be McDaniel or Approved Equal.
6. See Sheet S-01 for Location of Exhaust Fan and Lights.

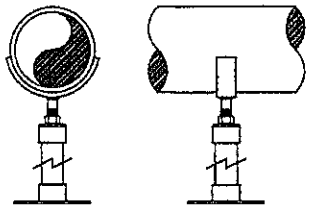

12 STANDON MODEL S92 PIPE SUPPORT DETAIL
Not to Scale

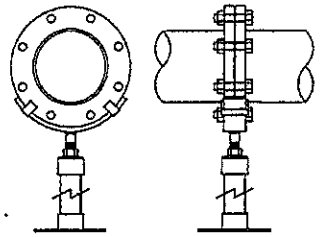

13 STANDON MODEL S96 FLANGE SADDLE SUPPORT DETAIL
Not to Scale

SOUTH JORDAN
U T A H

SOUTH JORDAN CITY
PRV VAULT DETALS

SIZE 10" OR SMALLER	DWG NO.	REV
SCALE		SHEET 3/3

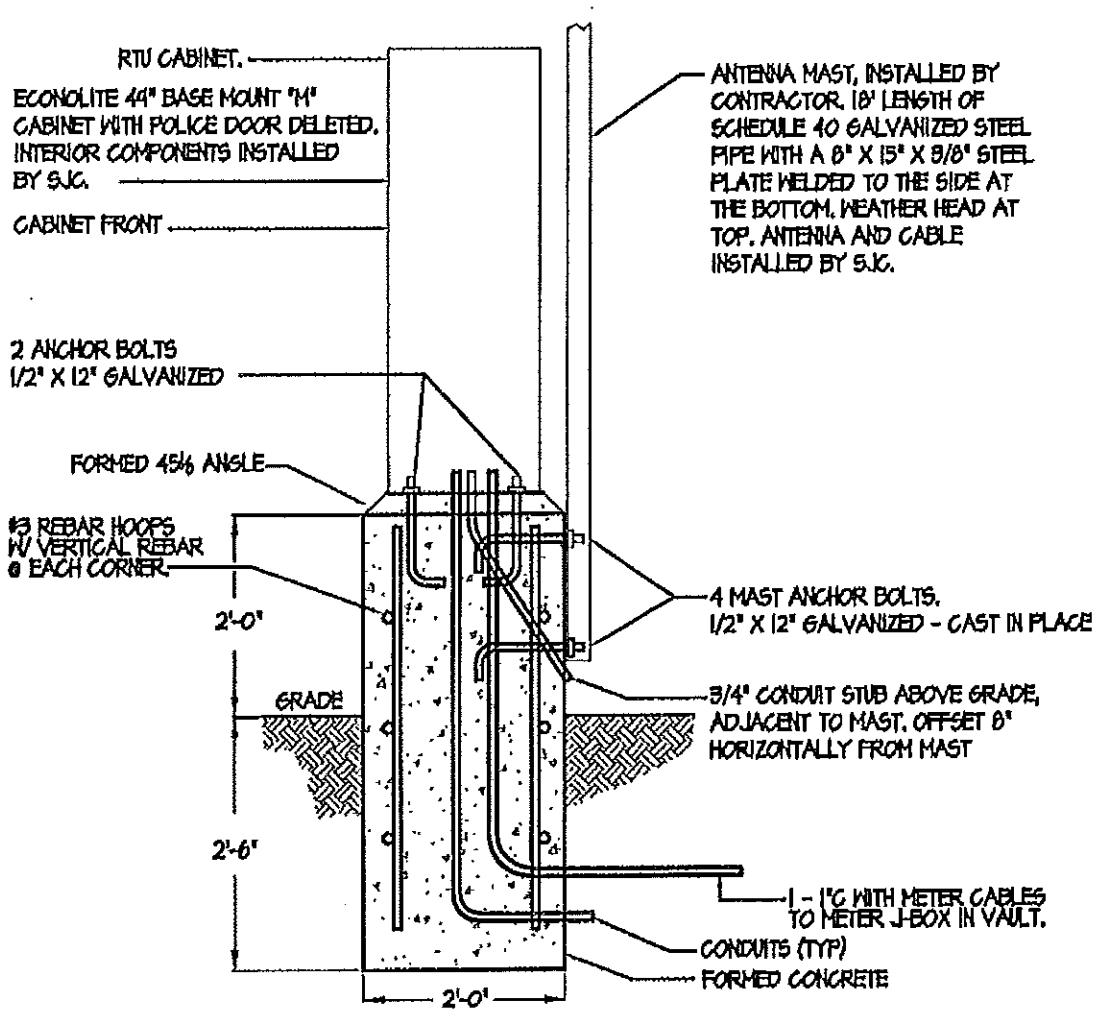

SJC RTU PEDESTAL ELEVATION

SCALE: NONE

9
E-2

LANDSCAPE
AND
IRRIGATION

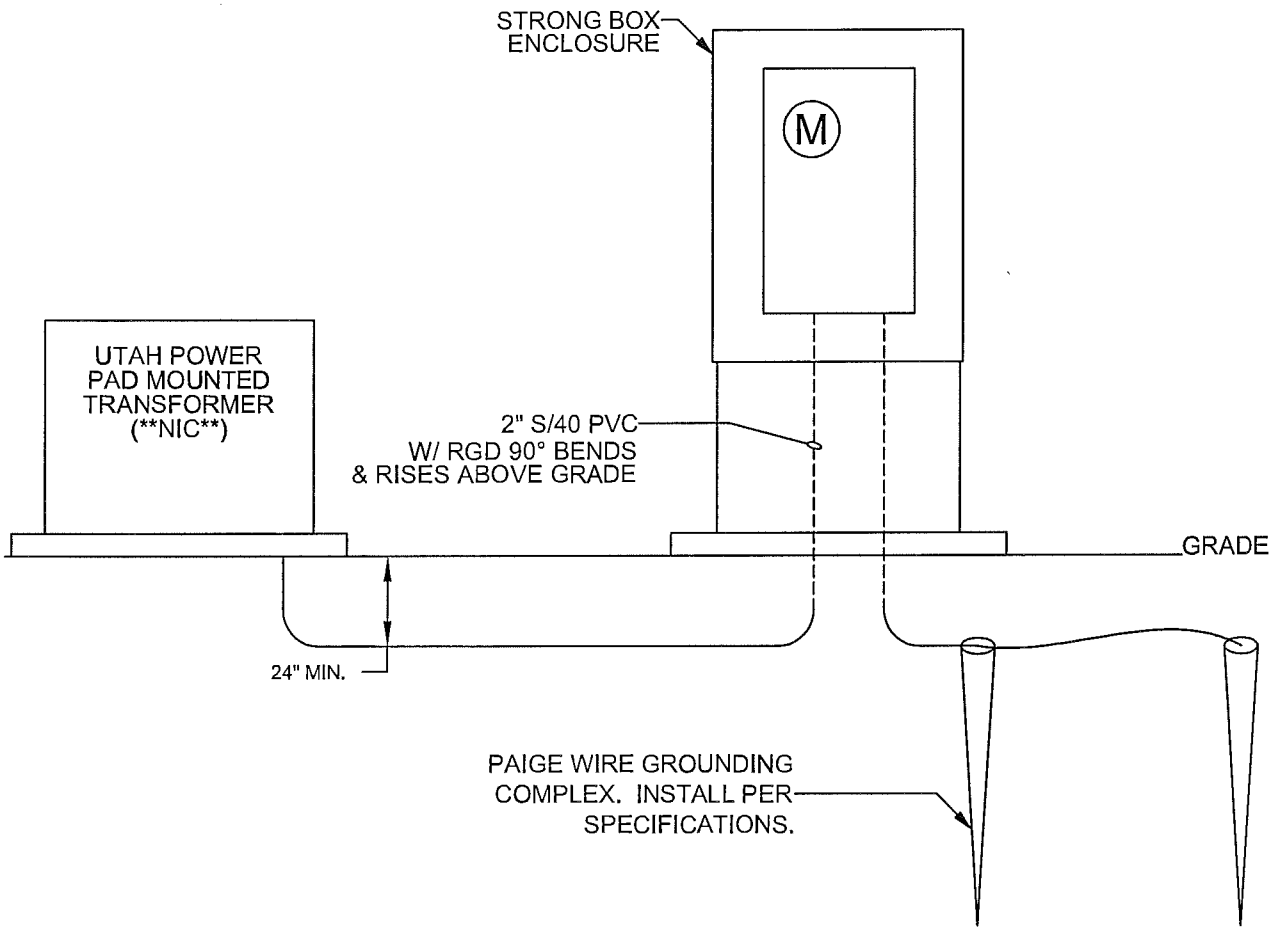

IRRIGATION DETAIL IRR-01
LINE DRAWING TRANSFORMER ENCLOSURE

version: 01, revision: 00, date: 8/2006

DALE WINCHESTER &
ASSOCIATES
2215 East Pincrest Lane
Sandy UT 84092
801 571-6060

SOUTH JORDAN CITY
PARKS DEPARTMENT
1600 West Towne Center Drive
South Jordan, Utah 84095
(801) 254-3742

SOUTH JORDAN

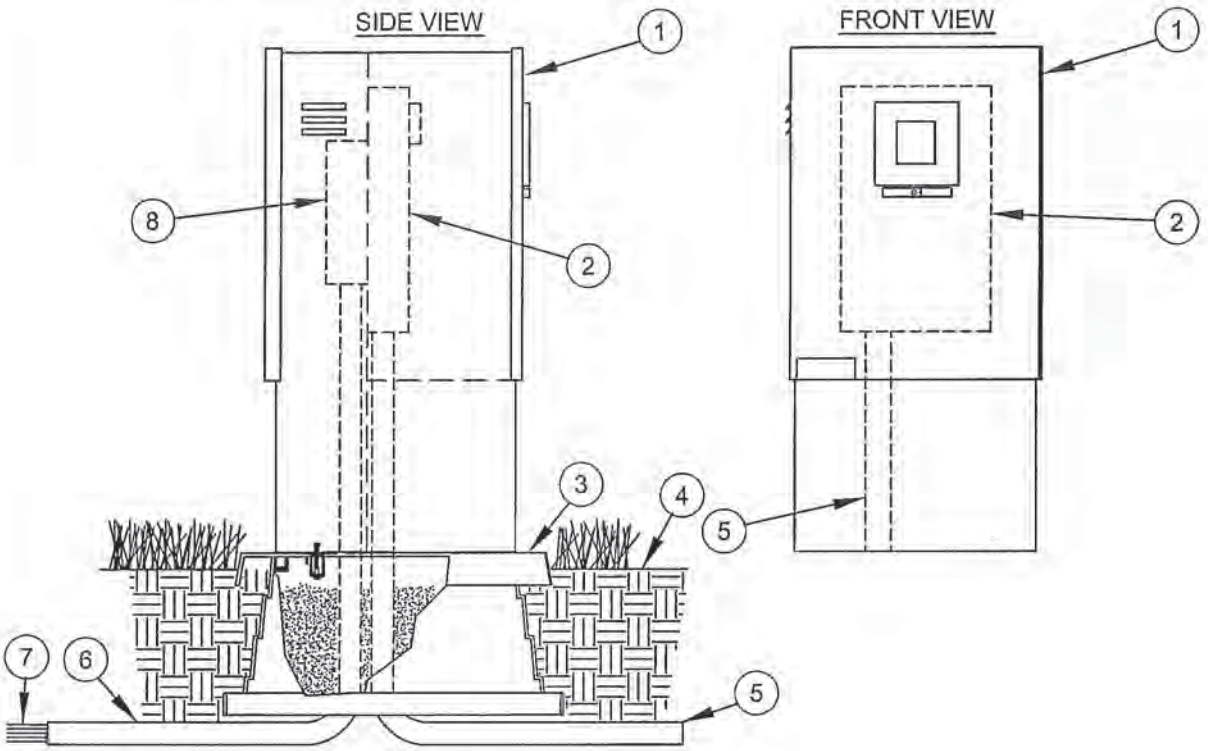

LEGEND

1. STRONG BOX BRAND METERED CONTROLLER ENCLOSURE, MODEL SB-24DSS/240V
2. METER/PANEL COMBINATION SQUARE D MODEL SC1624M
3. STRONG BOX BRAND QUICK PAD, MODEL QP-24
4. FINISH GRADE.
5. CONDUIT FOR LINE FEED INTO METER/PANEL COMBO. EXTEND INTO UP&L TRANSFORMER
6. PVC LONG SWEEP ELL - USE ONE SWEEP ELL PER CONTROLLER.
7. DIRECT BURIAL CONTROL WIRES TO CONTROL VALVES.
8. AUTOMATIC CONTROLLER.

IRRIGATION DETAIL IRR-02
STRONG BOX COMBO METER ENCLOSURE

version: 01, revision: 00, date: 8/2006

DALE WINCHESTER & ASSOCIATES
2215 East Pincrest Lane
Sandy UT 84092
801 571-6060

SOUTH JORDAN CITY
PARKS DEPARTMENT
1600 West Towne Center Drive
South Jordan, Utah 84095
(801) 254-3742

SOUTH JORDAN

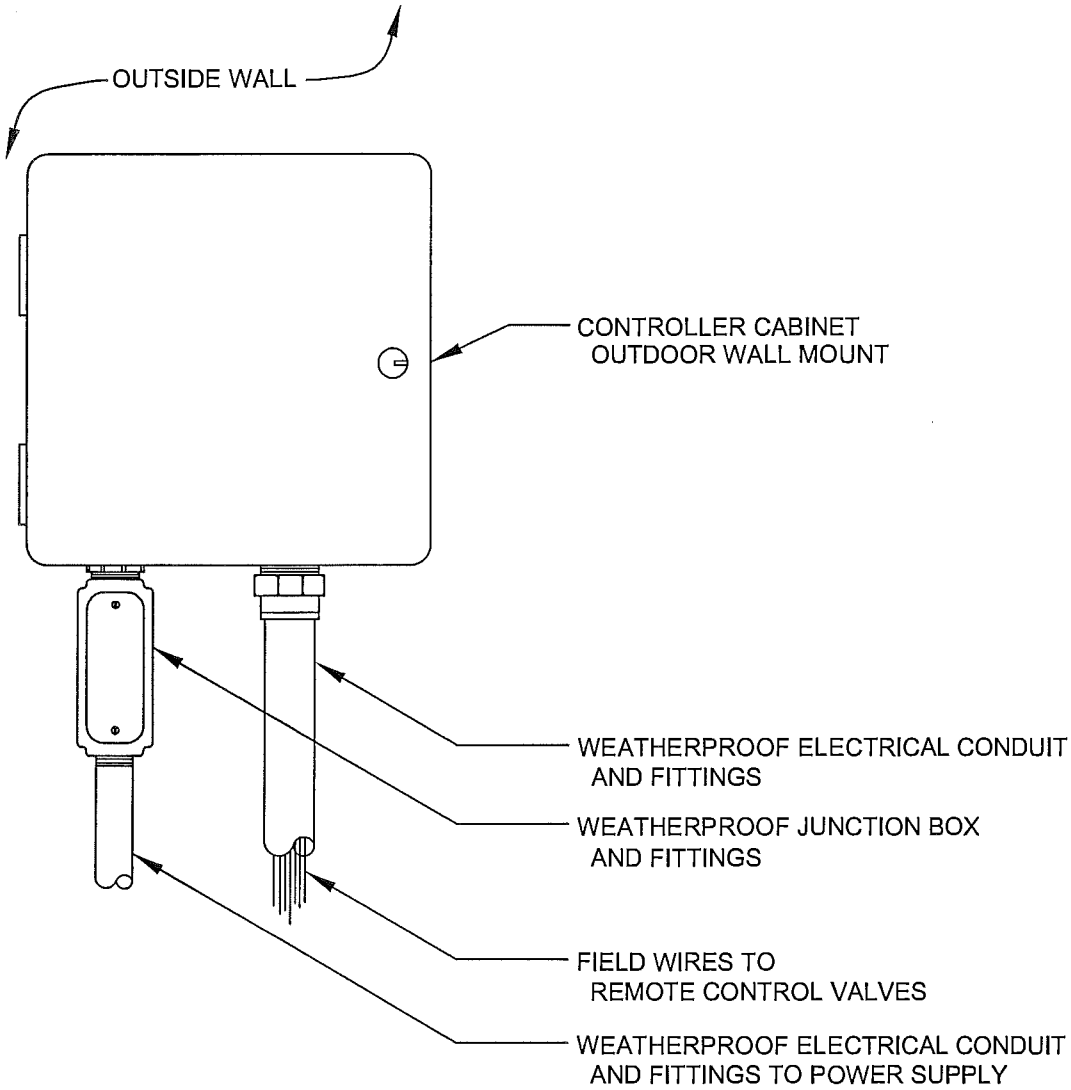

NOTE PVC SHALL NOT BE USED IN WIRING CONNECTIONS OR CONDUIT

IRRIGATION DETAIL IRR-03
LINE DRAWING TRANSFORMER ENCLOSURE

version: 01, revision: 00, date: 8/2006

DALE WINCHESTER &
ASSOCIATES
2215 East Pincrest Lane
Sandy UT 84092
801 571-6060

SOUTH JORDAN CITY
PARKS DEPARTMENT
1600 West Towne Center Drive
South Jordan, Utah 84095
(801) 254-3742

SOUTH JORDAN

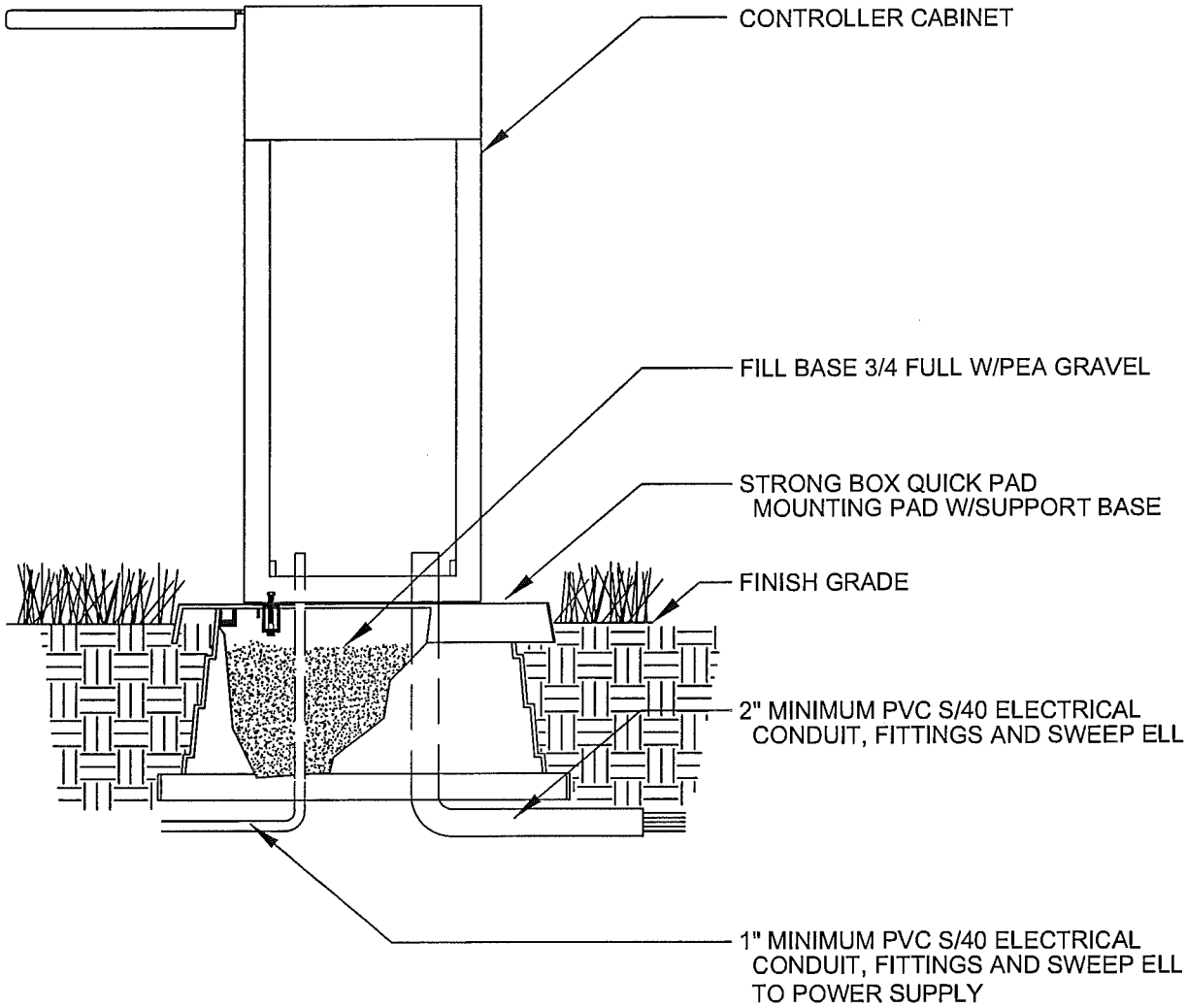

NOTE: INSTALL PAIGE WIRE GROUNDING GRID PER MFG. REQUIREMENTS

IRRIGATION DETAIL IRR-04
PEDESTAL MOUNT
CONTROLLER

version: 01, revision: 00, date: 8/2006

DALE WINCHESTER &
ASSOCIATES
2215 East Pincrest Lane
Sandy UT 84092
801 571-6060

SOUTH JORDAN CITY
PARKS DEPARTMENT
1600 West Towne Center Drive
South Jordan, Utah 84095
(801) 254-3742

SOUTH JORDAN

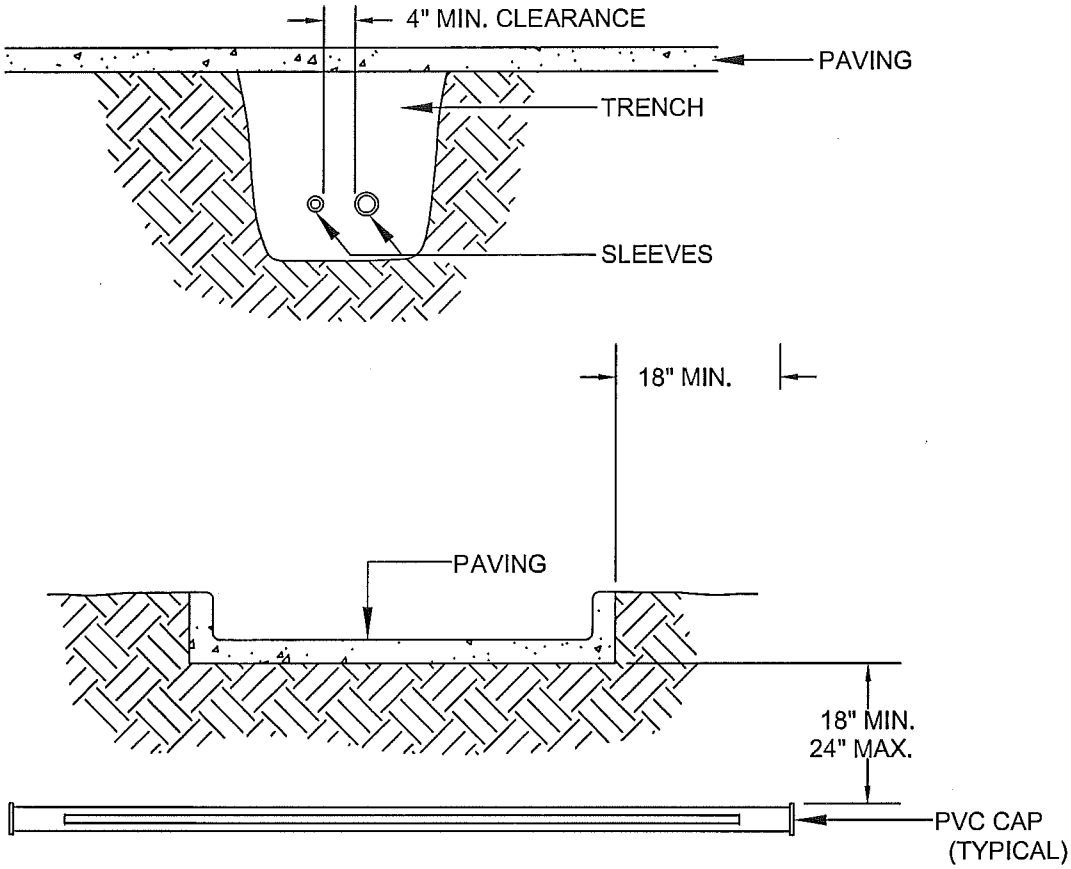

NOTES:
1. SLEEVES UNDER ROADS TO BE DUCTILE IRON IF CODE DIRECTS, OTHERWISE PVC.
2. ALL JOINTS (EXCEPT DUCTILE IRON) TO BE SOLVENT WELDED AND WATERTIGHT.
3. WHERE THERE IS MORE THAN ONE SLEEVE, PLACE THEM PARALLEL IN TRENCH. DO NOT PLACE ON TOP OF EACH OTHER.
4. MECHANICALLY TAMP TO 95% PROCTOR.

IRRIGATION DETAIL IRR-05
SLEEVING

version: 01, revision: 00, date: 8/2006

DALE WINCHESTER &
ASSOCIATES
2215 East Pincrest Lane
Sandy UT 84092
801 571-6060

SOUTH JORDAN CITY
PARKS DEPARTMENT
1600 West Towne Center Drive
South Jordan, Utah 84095
(801) 254-3742

SOUTH JORDAN

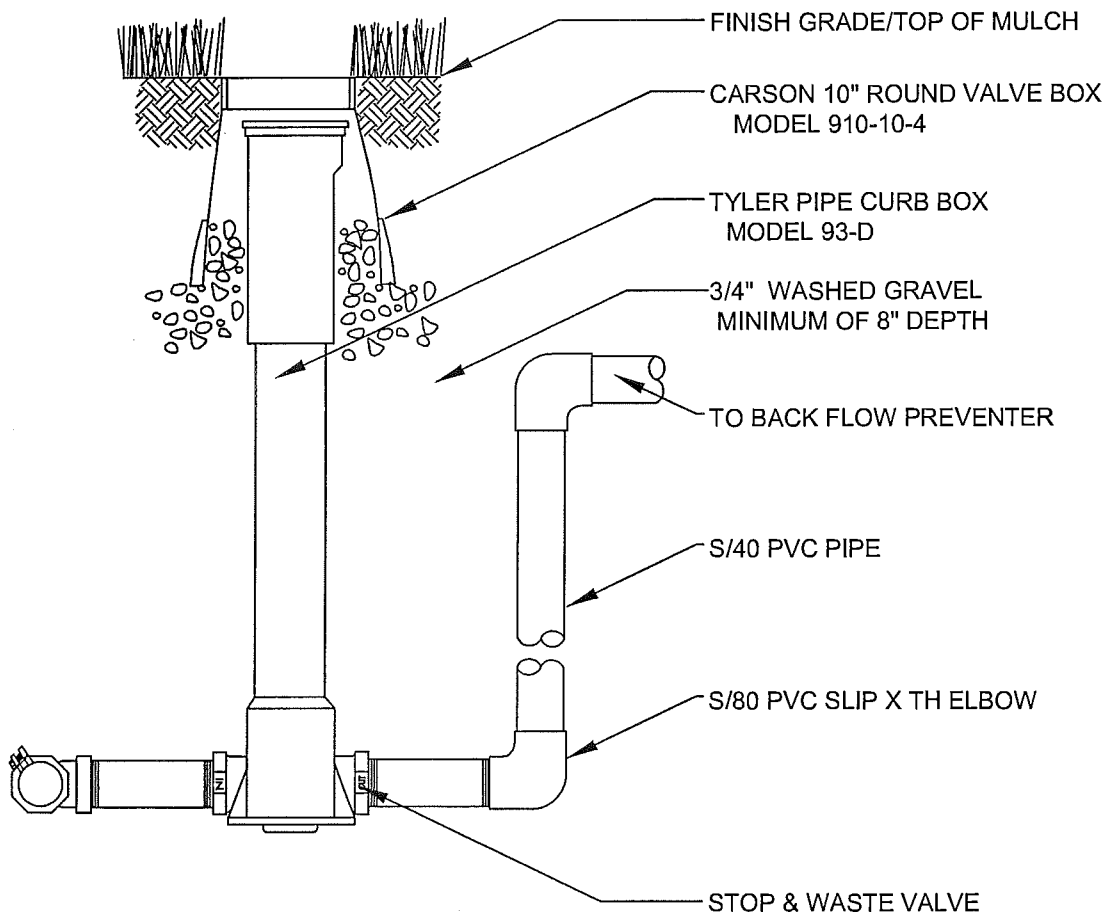

1. USE MUELLER ORISEAL MODEL H-102-88 VALVE WITH THREADED TOP.
   HARD PIPE TO SURFACE WITH PIPE AND FITTINGS AS NEEDED.
2. USE USE PACK JOINT TEE, SADDLE, OR PACK JOINT F. A. TO CONNECT ON TO SUPPLY LINE
   USE MINIMUM 6" BRASS NIPPLES ON EITHER SIDE OF STOP & WASTE VALVE

IRRIGATION DETAIL IRR-06
STOP & WASTE VALVE

version: 01, revision: 00, date: 8/2006

DALE WINCHESTER &
ASSOCIATES
2215 East Pincrest Lane
Sandy UT 84092
801 571-6060

SOUTH JORDAN CITY
PARKS DEPARTMENT
1600 West Towne Center Drive
South Jordan, Utah 84095
(801) 254-3742

SOUTH JORDAN

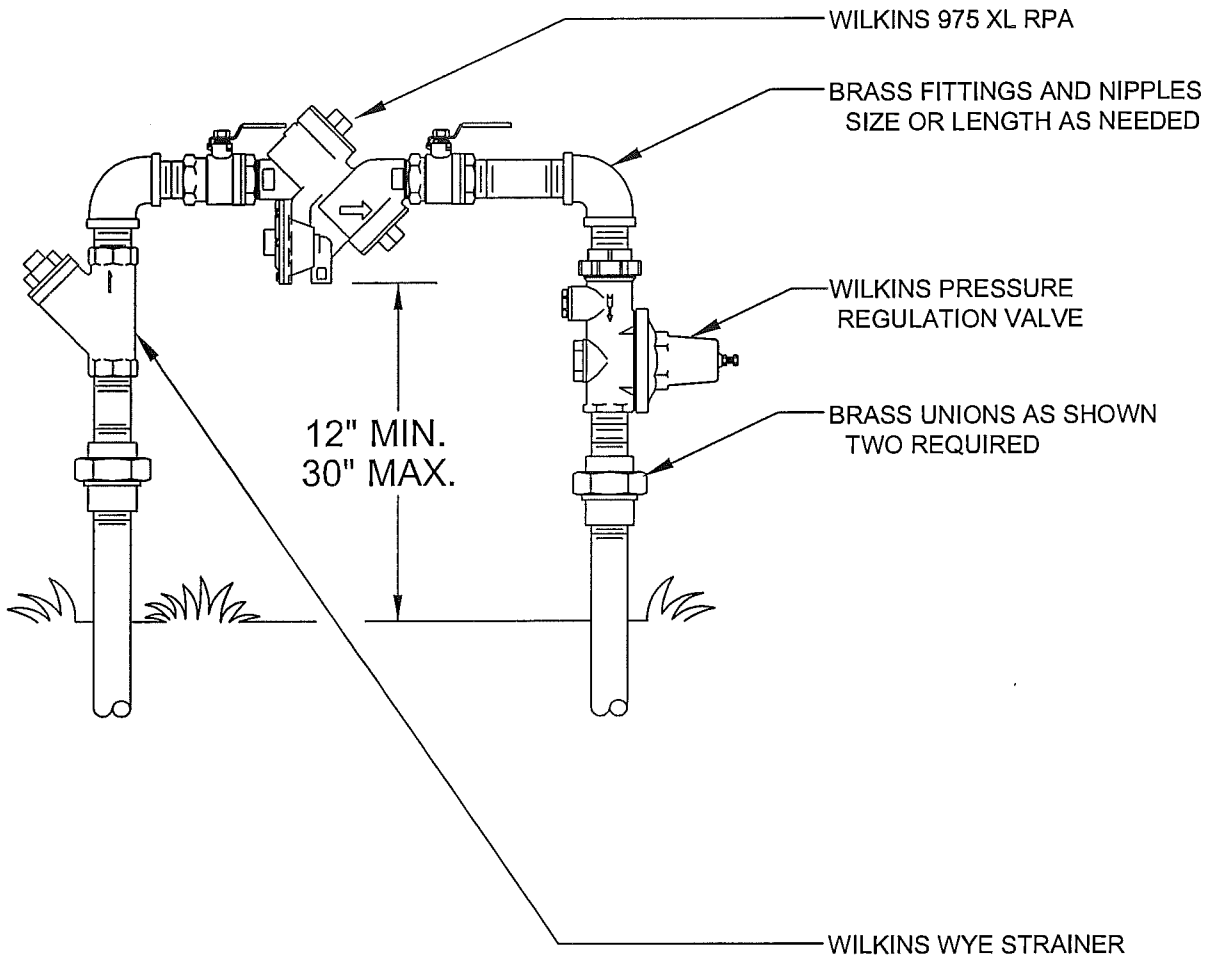

1. LOCATE BACKFLOW DEVICE IN INCONSPICUOUS AREA IF POSSIBLE.
2. ALL PIPE, FITTINGS AND COMPONENTS SHALL BE BRASS.

IRRIGATION DETAIL IRR-07
BACKFLOW RPA

version: 01, revision: 00, date: 8/2006

DALE WINCHESTER &
ASSOCIATES
2215 East Pincrest Lane
Sandy UT 84092
801 571-6060

SOUTH JORDAN CITY
PARKS DEPARTMENT
1600 West Towne Center Drive
South Jordan, Utah 84095
(801) 254-3742

SOUTH JORDAN

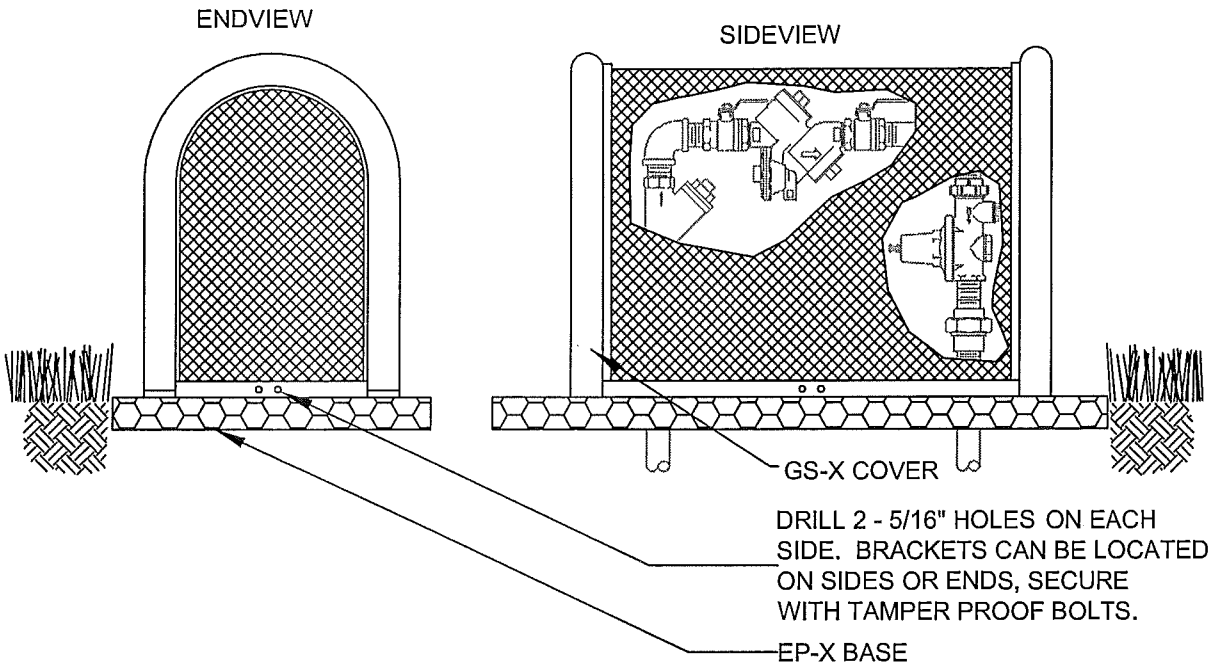

1. USE BPDI BRAND 'GUARDSHACK', MODEL GS-X, WITH FOREST GREEN POWDER COATING. INSTALL TO MANUFACTURERS RECOMMENDATION.
2. USE BPDI BRAND 'ENCPAD' EP-X, PLASTIC BASE WITH 'PADLOK' ANCHOR HARDWARE. INSTALL TO MANUFACTURERS RECOMMENDATION.

IRRIGATION DETAIL IRR-08
BACKFLOW COVER

version: 01, revision: 00, date: 8/2006

DALE WINCHESTER & ASSOCIATES
2215 East Pincrest Lane
Sandy UT 84092
801 571-6060

SOUTH JORDAN CITY
PARKS DEPARTMENT
1600 West Towne Center Drive
South Jordan, Utah 84095
(801) 254-3742

SOUTH JORDAN

SECTION VIEW

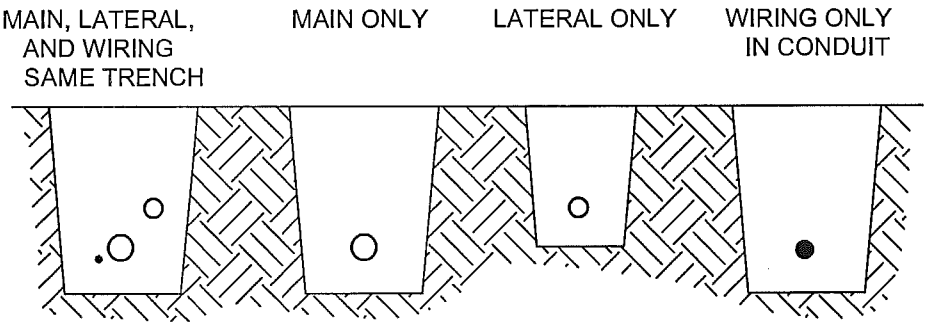

PLAN VIEW

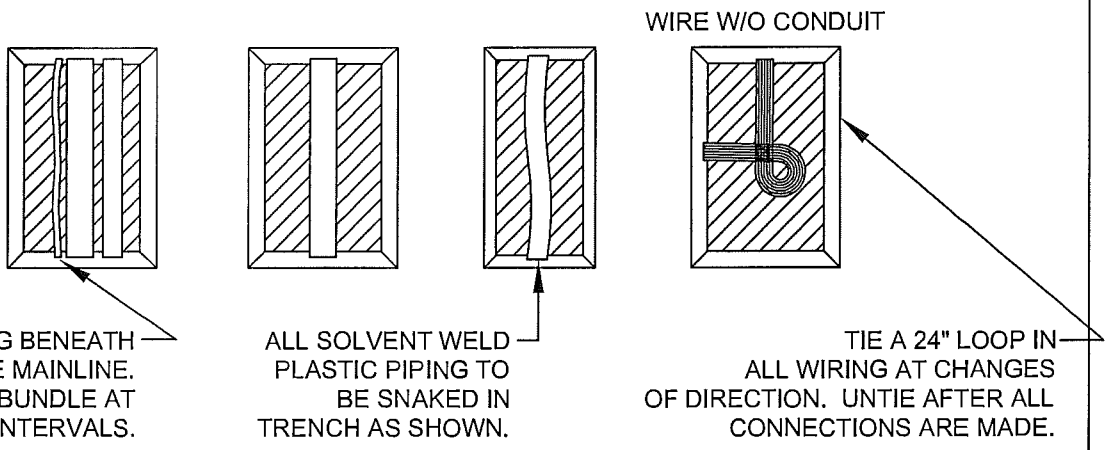

NOTES:

1. SLEEVES SHALL BE TWICE THE DIAMETER OF THE PIPE WITHIN.
2. SLEEVING SIZES 2" THROUGH 4" SHALL BE S/40 SOLVENT WELD. 6" AND ABOVE SHALL BE CL 200 GASKETED.
3. PIPE AND WIRE SHALL BE PLACED IN SEPARATE SLEEVES.
4. MAIN LINE SHALL HAVE 18" MIN. COVER, LATERAL LINE SHALL HAVE 12" MIN. COVER.

IRRIGATION DETAIL IRR-09
PIPE & WIRE TRENCH

version: 01, revision: 00, date: 8/2006

DALE WINCHESTER & ASSOCIATES
2215 East Pincrest Lane
Sandy UT 84092
801 571-6060

SOUTH JORDAN CITY
PARKS DEPARTMENT
1600 West Towne Center Drive
South Jordan, Utah 84095
(801) 254-3742

SOUTH JORDAN

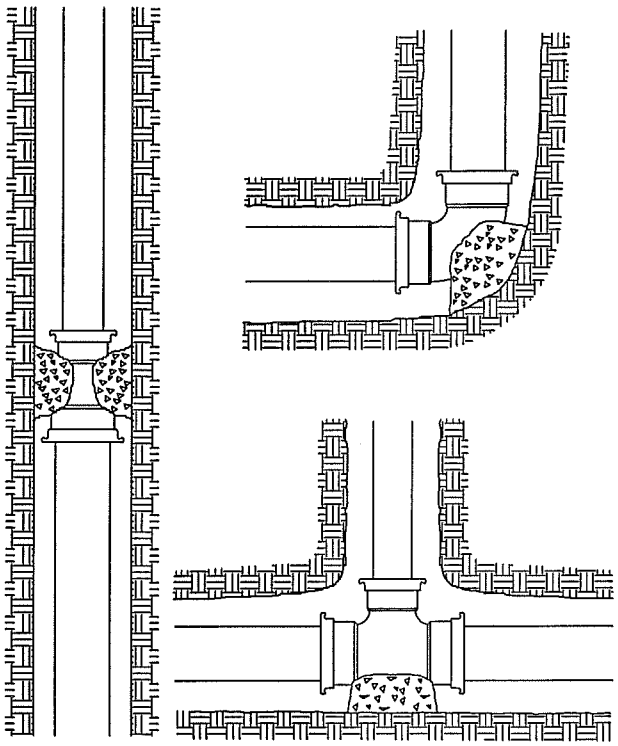

TABLE 1

SIZE	TEES PLUGS	90° BEND	45° BEND	22.5° BEND
2"	363	513	259	141
2 1/2"	531	751	379	207
3"	788	1,114	562	307
4"	1,302	1,841	928	508
6"	2,822	3,990	2,012	1,101
8"	4,783	6,763	3,410	1,865
10"	7,430	10,506	5,297	2,898
12"	10,452	14,778	7,452	4,076

FOR REDUCERS, SUBTRACT SMALL OPENING PLUG THRUST FROM LARGE OPENING PLUG THRUST TO CALCULATE THRUST / 100.

TABLE 2

SOIL TYPE	SAFE BEARING LOAD LBS PER SQ FT*
SOFT CLAY	1,000
SAND	2,000
SAND & GRAVEL	3,000
SAND & GRAVEL CEMENTED W/CLAY	4,000
HARD PAN	10,000

*THE ABOVE BEARING LOAD DATA WAS PROVIDED BY HARCO MFG. WHEN IN DOUBT, THE CONTRACTOR SHALL CONTACT A SOILS ENGINEER AND CONTRACT FOR A SOILS BEARING, OR OTHER NECESSARY TESTS.

NOTES:

1. PROVIDE THRUST BLOCKS AT ALL CHANGES IN SIZE OR DIRECTION. BENDS, REDUCERS, PLUGS AND THE OPPOSITE SIDE OF TEE BRANCHES ALL REQUIRE THRUST BLOCKS.
2. THE SIZE OF THE THRUST BLOCK IS DETERMINED BY THE WORKING PRESSURE, THE SIZE AND TYPE OF FITTING, AND SOIL CONDITIONS AT THE JOB SITE. TO CALCULATE THE AREA OF CONTACT WITH THE SOIL, FOLLOW THESE STEPS:
   CALCULATE THE THRUST BY SELECTING THRUST / 100 BY SIZE AND TYPE OF FITTING FROM TABLE #1 AND MULTIPLYING THRUST / 100 BY SYSTEM PRESSURE / BY 100.
3. DIVIDE THE TOTAL THRUST BY BEARING CAPACITY OF THE SOIL IN EXCAVATION, (FROM TABLE #2 TO DETERMINE THE AREA IN SQUARE FEET OF THRUST BLOCK REQUIRED TO BE IN CONTACT WITH THE UNDISTURBED SOIL.

IRRIGATION DETAIL IRR-10
THRUST BLOCKING

version: 01, revision: 00, date: 8/2006

DALE WINCHESTER & ASSOCIATES
2215 East Pincrest Lane
Sandy UT 84092
801 571-6060

SOUTH JORDAN CITY
PARKS DEPARTMENT
1600 West Towne Center Drive
South Jordan, Utah 84095
(801) 254-3742

SOUTH JORDAN

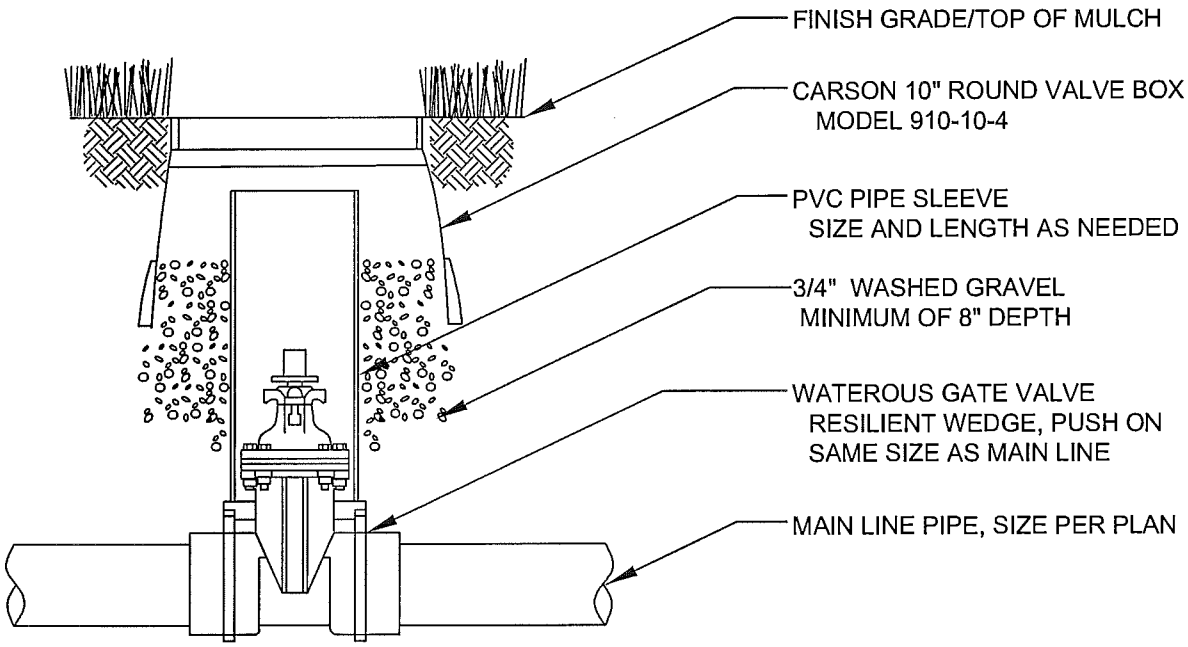

NOTES:

1. TO BE USED ON MAIN LINE PIPE 3" AND LARGER.
2. VALVE SHALL HAVE 2" SQUARE OPERATING NUT.

IRRIGATION DETAIL IRR-11
LARGE GATE VALVE

version: 01, revision: 00, date: 8/2006

DALE WINCHESTER &
ASSOCIATES
2215 East Pincrest Lane
Sandy UT 84092
801 571-6060

SOUTH JORDAN CITY
PARKS DEPARTMENT
1600 West Towne Center Drive
South Jordan, Utah 84095
(801) 254-3742

SOUTH JORDAN

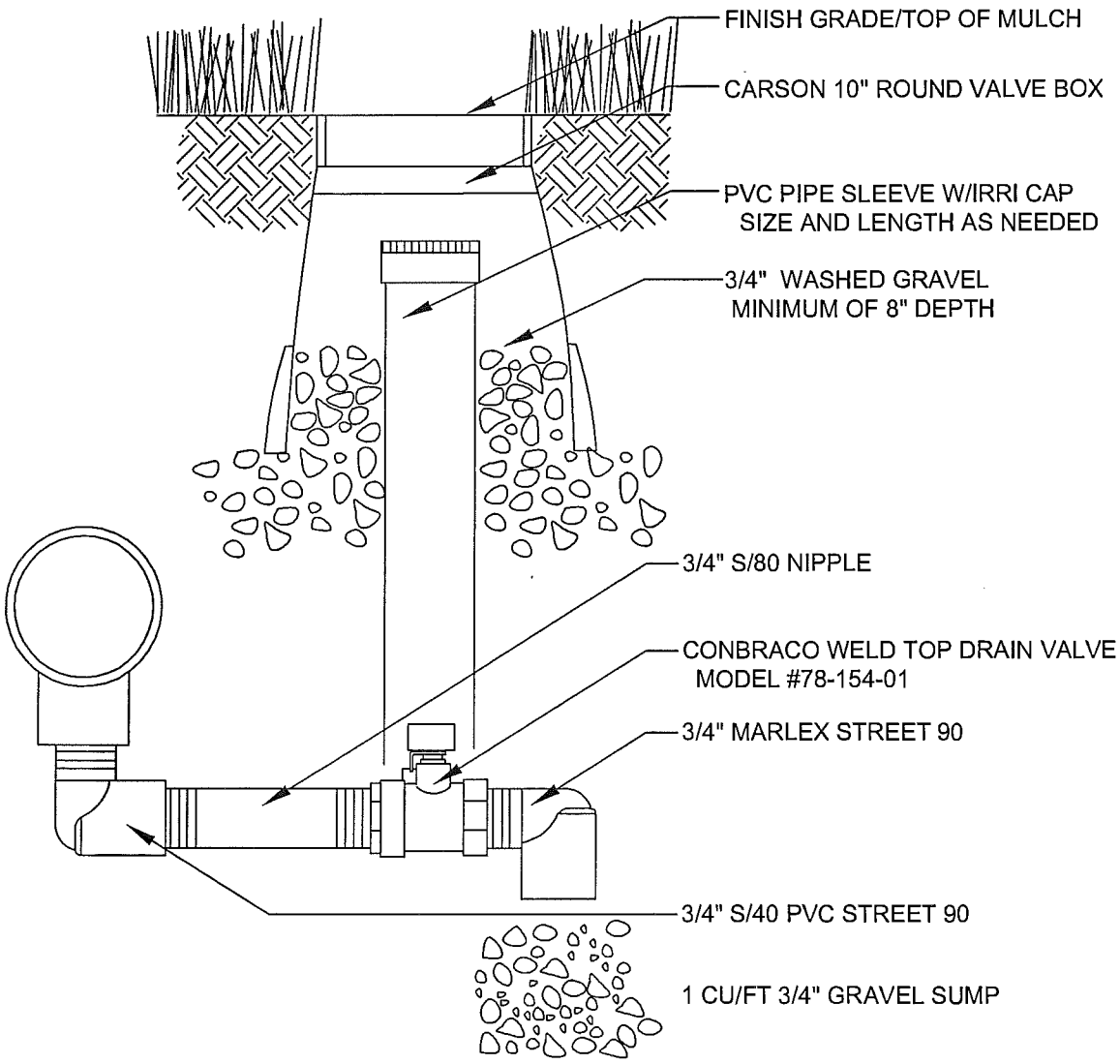

IRRIGATION DETAIL IRR-12
MANUAL DRAIN

version: 01, revision: 00, date: 8/2006

DALE WINCHESTER &
ASSOCIATES
2215 East Pincrest Lane
Sandy UT 84092
801 571-6060

SOUTH JORDAN CITY
PARKS DEPARTMENT
1600 West Towne Center Drive
South Jordan, Utah 84095
(801) 254-3742

SOUTH JORDAN

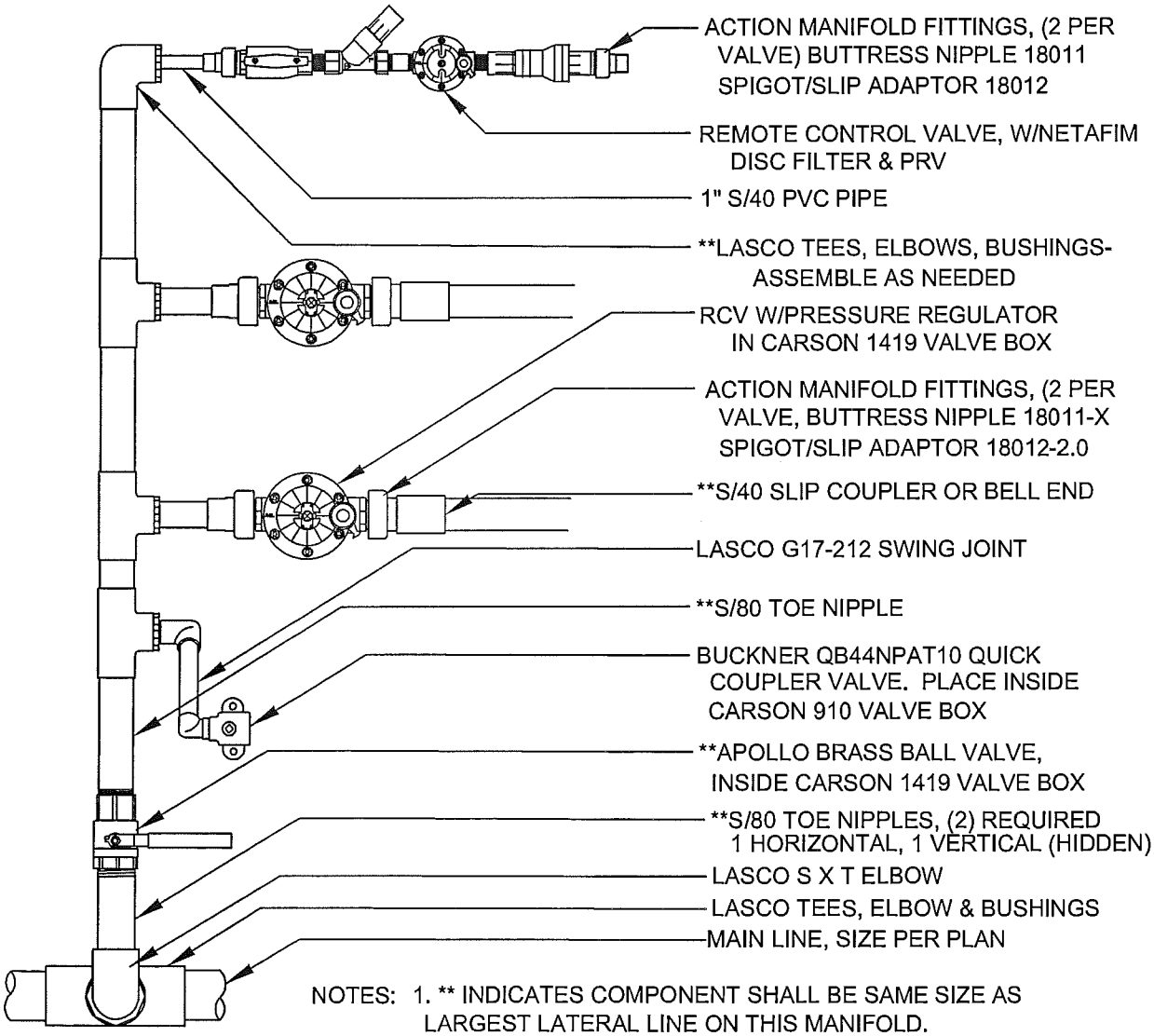

NOTES:
1. ** INDICATES COMPONENT SHALL BE SAME SIZE AS LARGEST LATERAL LINE ON THIS MANIFOLD.
2. DOWNSTREAM OF BALL VALVE: MANIFOLD FITTINGS SHALL BE S/80, PVC PIPE SHALL BE S/40.
3. LAY BALL VALVE ON SIDE. HANDLE VERTICAL IS OFF.

IRRIGATION DETAIL IRR-13
CONTROL VALVE MANIFOLD SCH-80

version: 01, revision: 00, date: 8/2006

DALE WINCHESTER & ASSOCIATES
2215 East Pincrest Lane
Sandy UT 84092
801 571-6060

SOUTH JORDAN CITY
PARKS DEPARTMENT
1600 West Towne Center Drive
South Jordan, Utah 84095
(801) 254-3742

SOUTH JORDAN

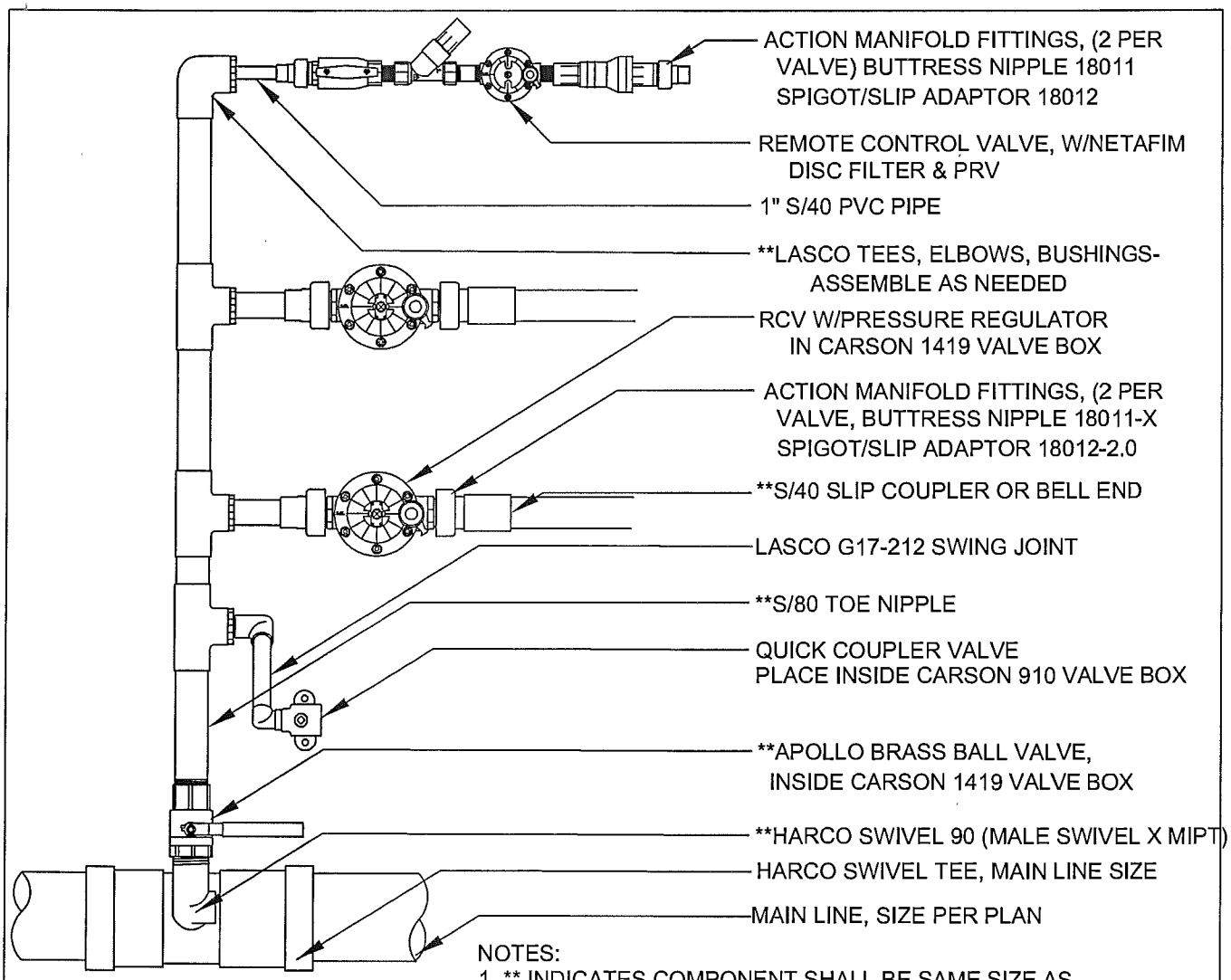

NOTES:
1. ** INDICATES COMPONENT SHALL BE SAME SIZE AS LARGEST LATERAL LINE ON THIS MANIFOLD.
2. DOWNSTREAM OF BALL VALVE: MANIFOLD FITTINGS SHALL BE S/80, PVC PIPE SHALL BE S/40.

IRRIGATION DETAIL IRR-14
CONTROL VALVE MANIFOLD HARCO

version: 01, revision: 00, date: 8/2006

DALE WINCHESTER & ASSOCIATES
2215 East Pincrest Lane
Sandy UT 84092
801 571-6060

SOUTH JORDAN CITY
PARKS DEPARTMENT
1600 West Towne Center Drive
South Jordan, Utah 84095
(801) 254-3742

SOUTH JORDAN

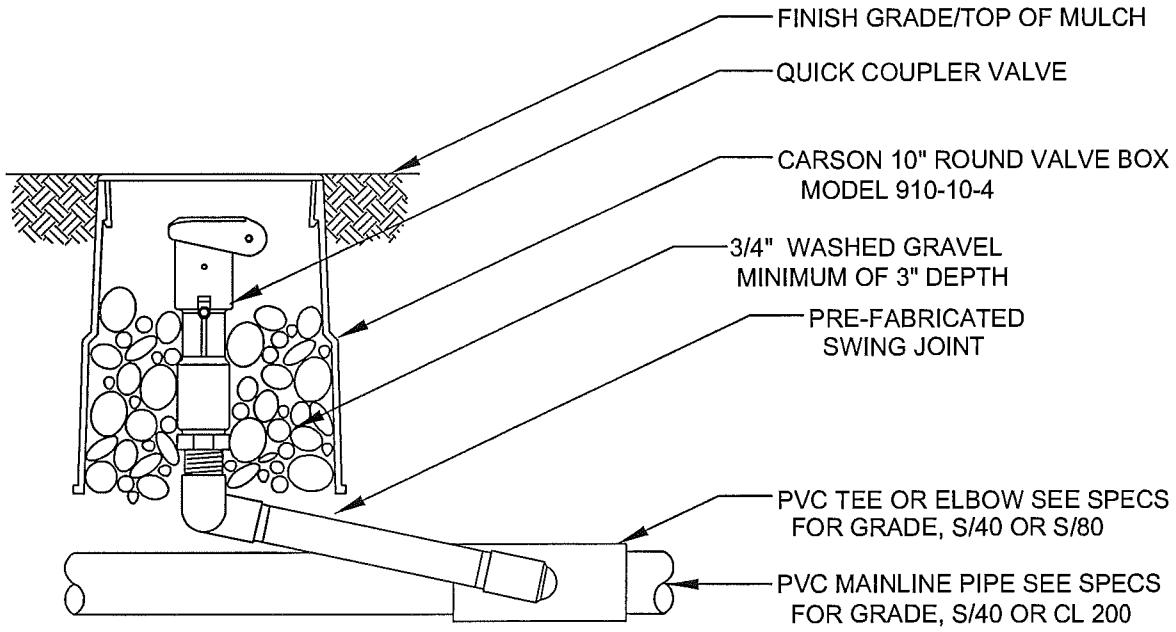

NOTES:

1. ACME O-RING SEALED THREADS ARE TO BE FINGER TIGHTENED AND THEN BACKED OFF ONE FULL ROTATION PRIOR TO INSTALLATION.
2. SWING JOINT LAY ARM SHALL BE INSTALLED AT ANGLE, BETWEEN 30 AND 45 DEGREES TO THE MAIN LINE PIPE.
3. SWING JOINT SHALL BE PRE-FABRICATED LASCO MODEL G17S-212

IRRIGATION DETAIL IRR-15
QUICK COUPLER VALVE

version: 01, revision: 00, date: 8/2006

DALE WINCHESTER &
ASSOCIATES
2215 East Pincrest Lane
Sandy UT 84092
801 571-6060

SOUTH JORDAN CITY
PARKS DEPARTMENT
1600 West Towne Center Drive
South Jordan, Utah 84095
(801) 254-3742

SOUTH JORDAN

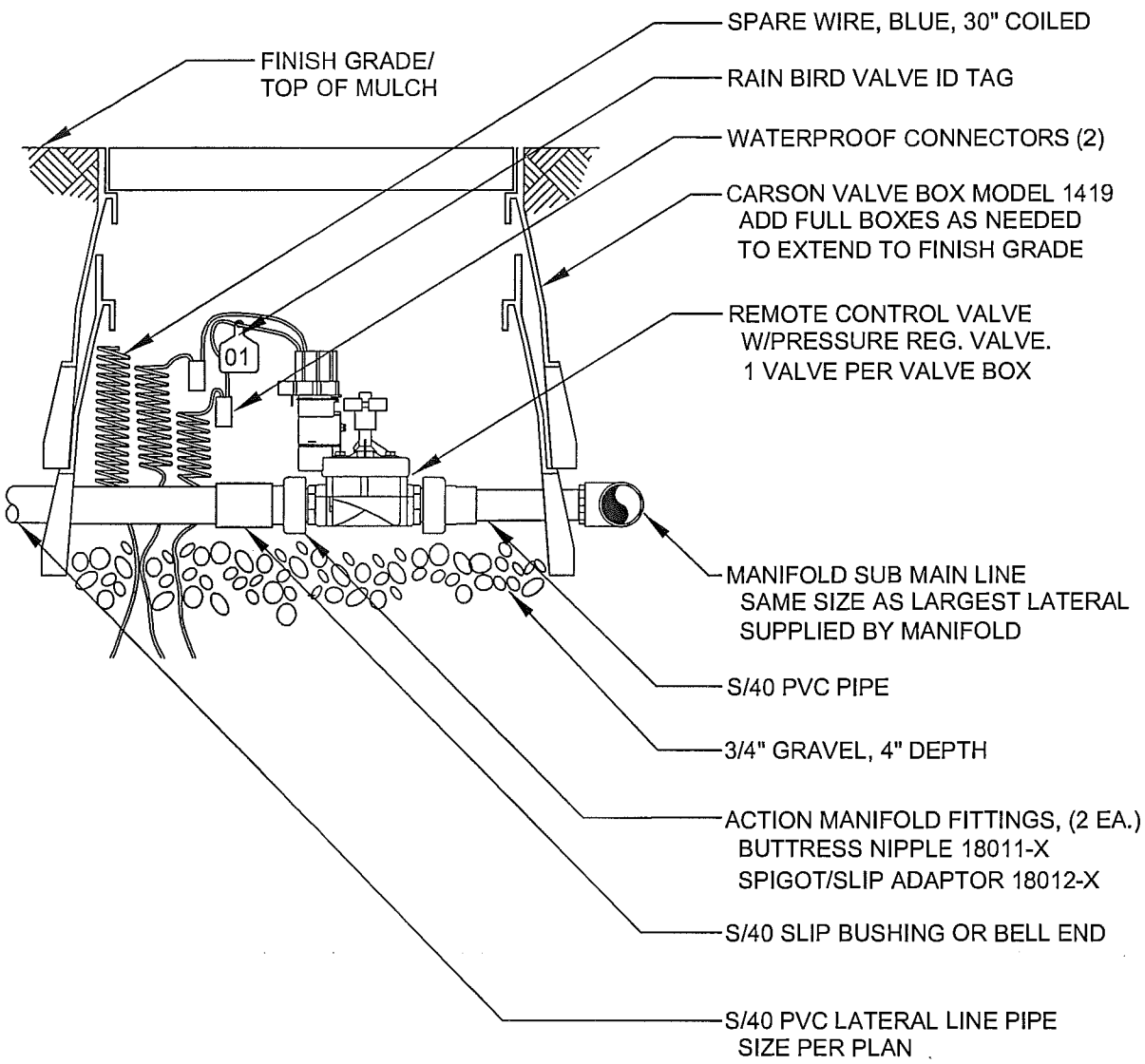

IRRIGATION DETAIL IRR-16
REMOTE CONTROL VALVE

version: 01, revision: 00, date: 8/2006

DALE WINCHESTER &
ASSOCIATES
2215 East Pincrest Lane
Sandy UT 84092
801 571-6060

SOUTH JORDAN CITY
PARKS DEPARTMENT
1600 West Towne Center Drive
South Jordan, Utah 84095
(801) 254-3742

SOUTH JORDAN

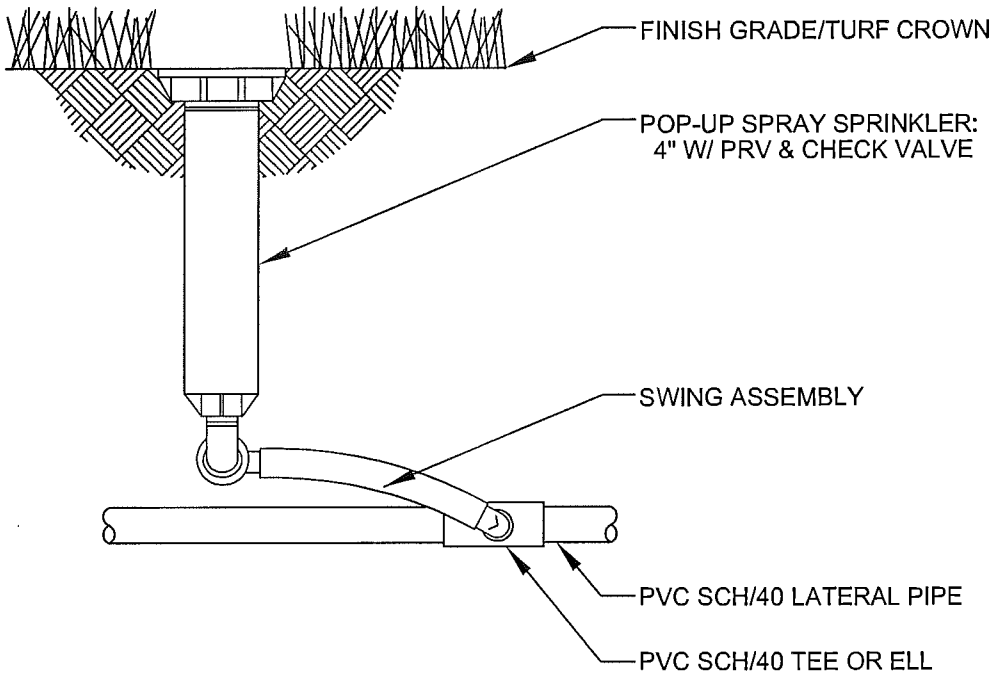

NOTES:

1. SWING JOINT ASSEMBLY: TWO SPIRAL BARB ELBOWS, 12-24" SWING PIPE, AND ONE 1/2" MARLEX STREET ELBOW.
2. USE FIXED SPRAY NOZZLES WHEREVER POSSIBLE.

IRRIGATION DETAIL IRR-17
4" POP-UP SPRAY HEAD

version: 01, revision: 00, date: 8/2006

DALE WINCHESTER &
ASSOCIATES
2215 East Pincrest Lane
Sandy UT 84092
801 571-6060

SOUTH JORDAN CITY
PARKS DEPARTMENT
1600 West Towne Center Drive
South Jordan, Utah 84095
(801) 254-3742

SOUTH JORDAN

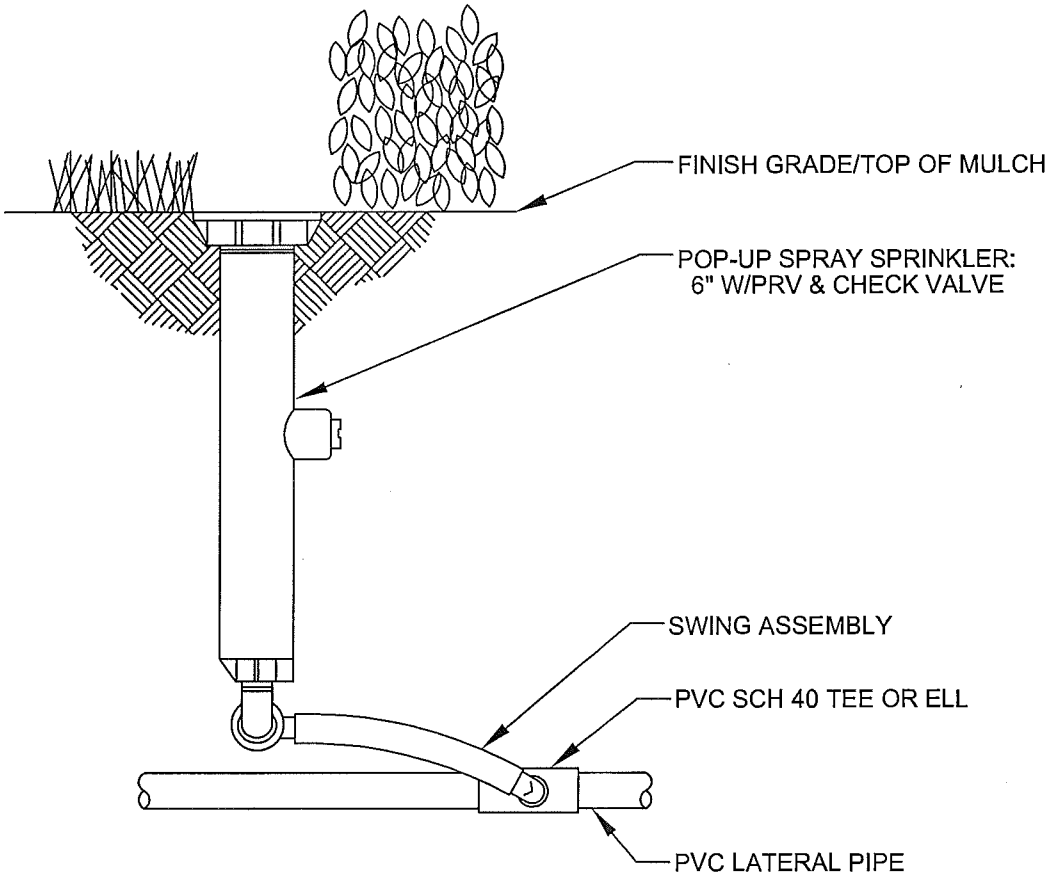

NOTES:

1. SWING JOINT ASSEMBLY: TWO SPIRAL BARB ELBOWS, 12-24" SWING PIPE, AND ONE 1/2" MARLEX STREET ELBOW.
2. USE FIXED SPRAY NOZZLES WHEREVER POSSIBLE.

IRRIGATION DETAIL IRR-18
6" POP-UP SPRAY HEAD

version: 01, revision: 00, date: 8/2006

DALE WINCHESTER &
ASSOCIATES
2215 East Pincrest Lane
Sandy UT 84092
801 571-6060

SOUTH JORDAN CITY
PARKS DEPARTMENT
1600 West Towne Center Drive
South Jordan, Utah 84095
(801) 254-3742

SOUTH JORDAN

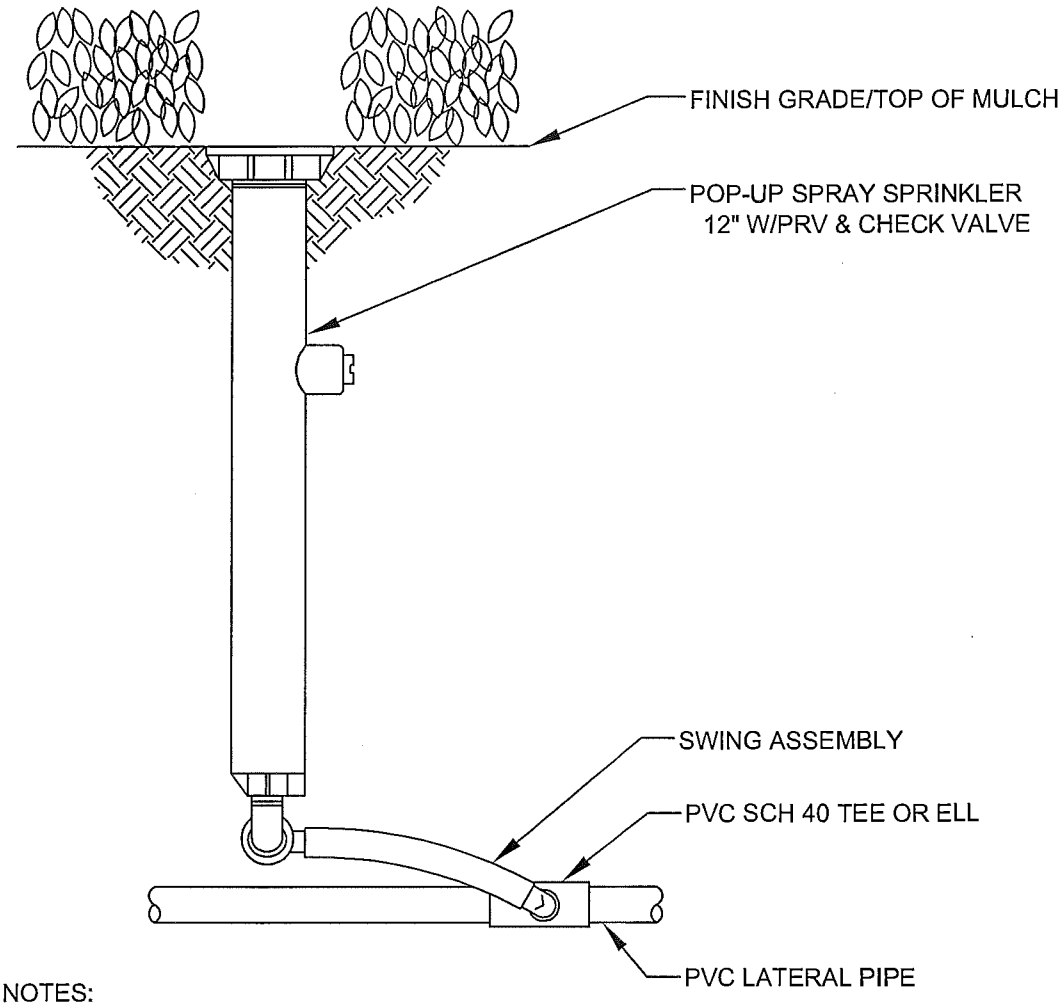

NOTES:

1. SWING JOINT ASSEMBLY: TWO SPIRAL BARB ELBOWS, 12-24" SWING PIPE, AND ONE 1/2" MARLEX STREET ELBOW.
2. USE FIXED SPRAY NOZZLES WHEREVER POSSIBLE.

IRRIGATION DETAIL IRR-19
12" POP-UP SPRAY HEAD

version: 01, revision: 00, date: 8/2006

DALE WINCHESTER &
ASSOCIATES
2215 East Pincrest Lane
Sandy UT 84092
801 571-6060

SOUTH JORDAN CITY
PARKS DEPARTMENT
1600 West Towne Center Drive
South Jordan, Utah 84095
(801) 254-3742

SOUTH JORDAN

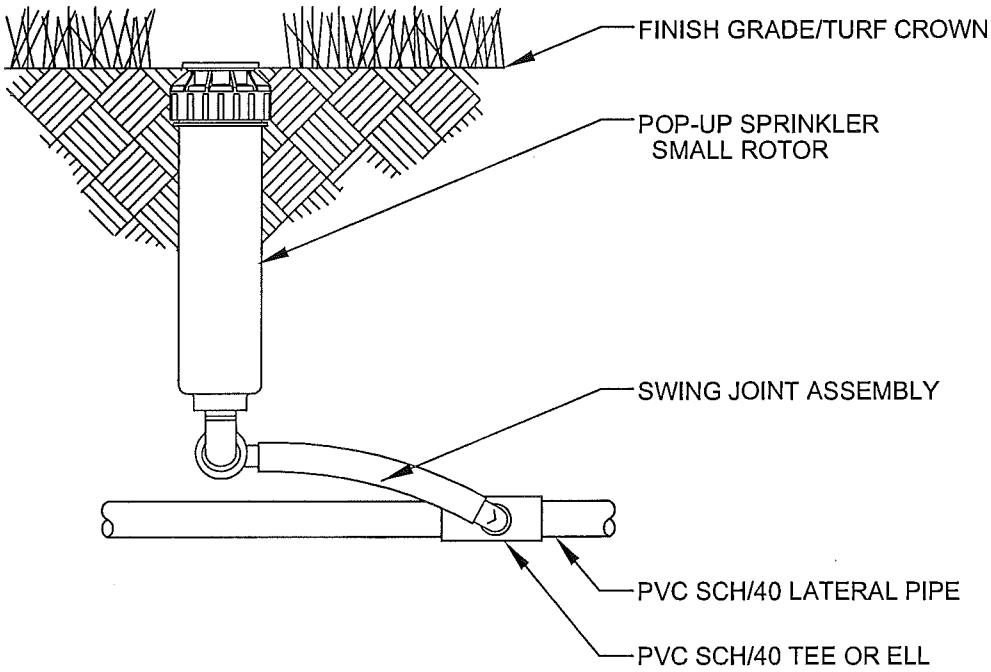

NOTES:

1. SWING JOINT JOINT ASSEMBLY: TWO SPIRAL BARB ELBOWS, SBE-050, 12-24" SWING PIPE, AND ONE 1/2" MARLEX STREET ELBOW.
2. USE NOZZLE SPECIFIED ON PLAN.

IRRIGATION DETAIL IRR-20
SMALL ROTOR HEAD

version: 01, revision: 00, date: 8/2006

DALE WINCHESTER &
ASSOCIATES
2215 East Pincrest Lane
Sandy UT 84092
801 571-6060

SOUTH JORDAN CITY
PARKS DEPARTMENT
1600 West Towne Center Drive
South Jordan, Utah 84095
(801) 254-3742

SOUTH JORDAN

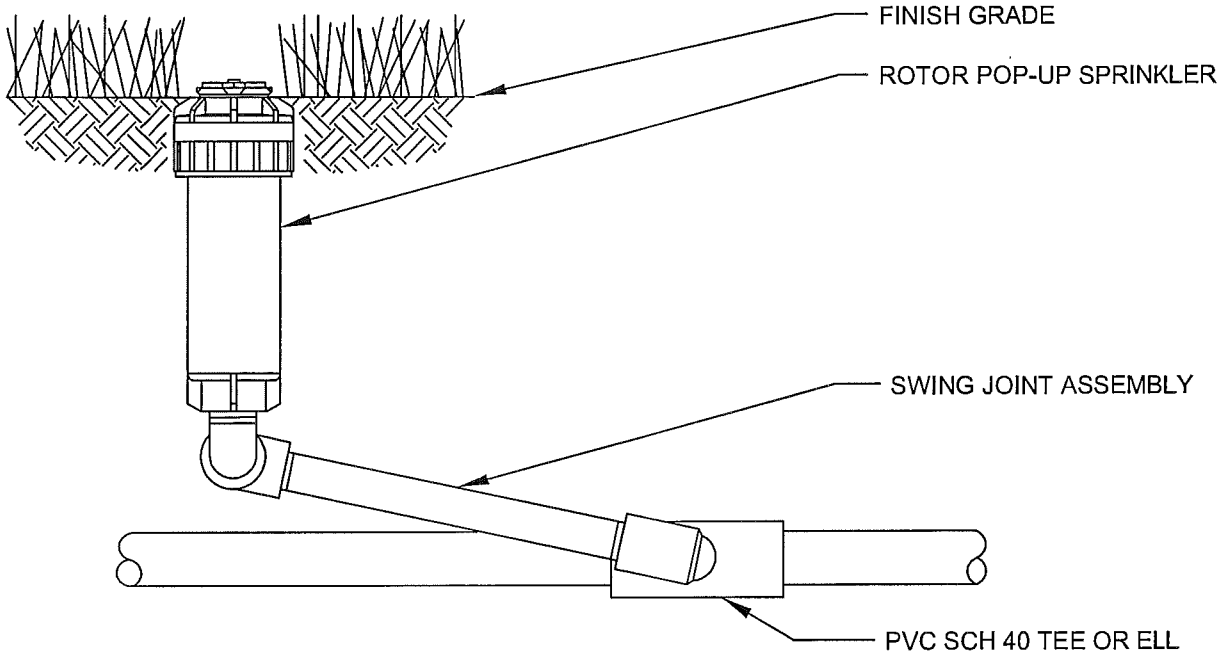

NOTES:

1. POSITION LAY ARM OF SWING JOINT 30 TO 45 DEGREES FROM LATERAL PIPE.
2. INSTALL NOZZLE AS INDICATED ON PLAN. USE BOTTOM INLET ONLY.
3. FOR SWING JOINT, USE 3 MARLEX STREET ELBOWS AND 1 S/80 12" NIPPLE .

IRRIGATION DETAIL IRR-21
MEDIUM ROTOR HEAD

version: 01, revision: 00, date: 8/2006

DALE WINCHESTER &
ASSOCIATES
2215 East Pincrest Lane
Sandy UT 84092
801 571-6060

SOUTH JORDAN CITY
PARKS DEPARTMENT
1600 West Towne Center Drive
South Jordan, Utah 84095
(801) 254-3742

SOUTH JORDAN

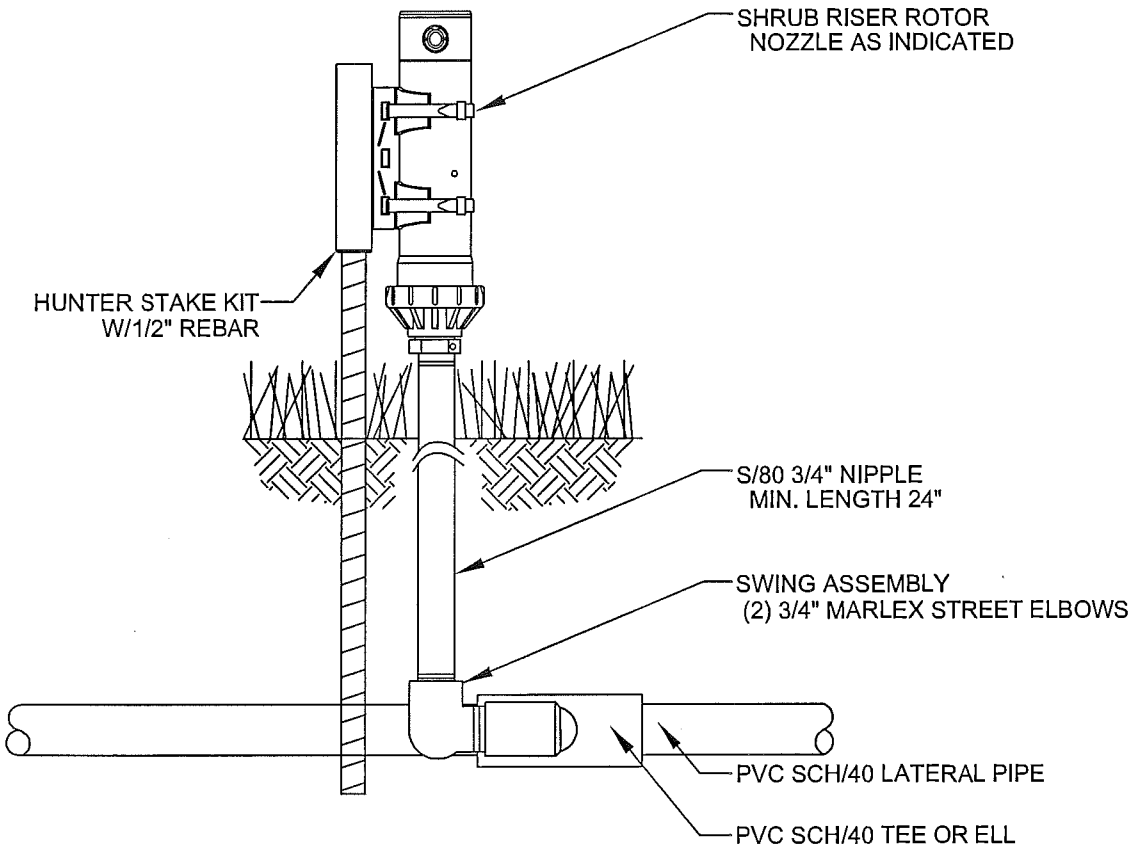

NOTES:

1. INSTALL 1/2" REBAR ROD SUFFICIENT TO PREVENT ROTOR MOVEMENT.
2. INSTALL STAKE KIT AS SHOWN W/CABLE TIES.
3. INSTALL 3/4 X 24 S/80 NIPPLE. EXTEND LENGHTH AS NEEDED.

IRRIGATION DETAIL IRR-22
MEDIUM ROTOR SHRUB RISER

version: 01, revision: 00, date: 8/2006

DALE WINCHESTER &
ASSOCIATES
2215 East Pincrest Lane
Sandy UT 84092
801 571-6060

SOUTH JORDAN CITY
PARKS DEPARTMENT
1600 West Towne Center Drive
South Jordan, Utah 84095
(801) 254-3742

SOUTH JORDAN

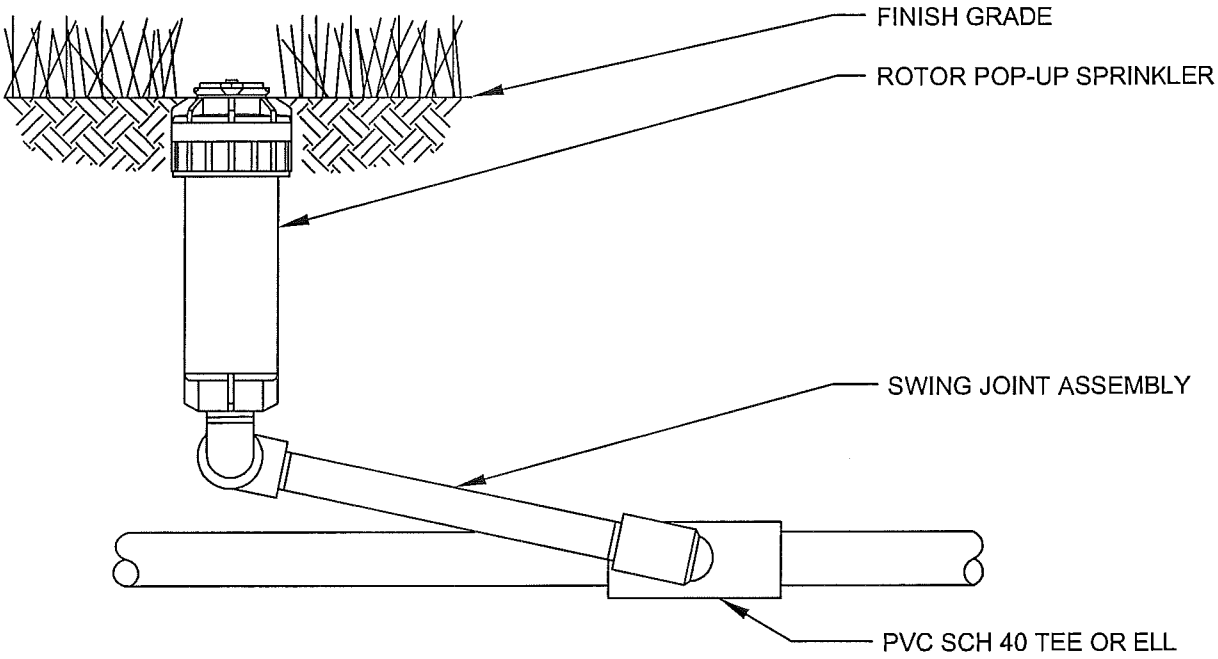

NOTES:

1. POSITION LAY ARM OF SWING JOINT 30 TO 45 DEGREES FROM LATERAL PIPE.
2. INSTALL NOZZLE AS INDICATED ON PLAN. USE BOTTOM INLET ONLY.
3. FOR SWING JOINT, USE MFG PRE-FABRICATED SWING JOINT ASSEMBLY.

IRRIGATION DETAIL IRR-23
SPORTS TURF HEAD

version: 01, revision: 00, date: 8/2006

DALE WINCHESTER &
ASSOCIATES
2215 East Pincrest Lane
Sandy UT 84092
801 571-6060

SOUTH JORDAN CITY
PARKS DEPARTMENT
1600 West Towne Center Drive
South Jordan, Utah 84095
(801) 254-3742

SOUTH JORDAN

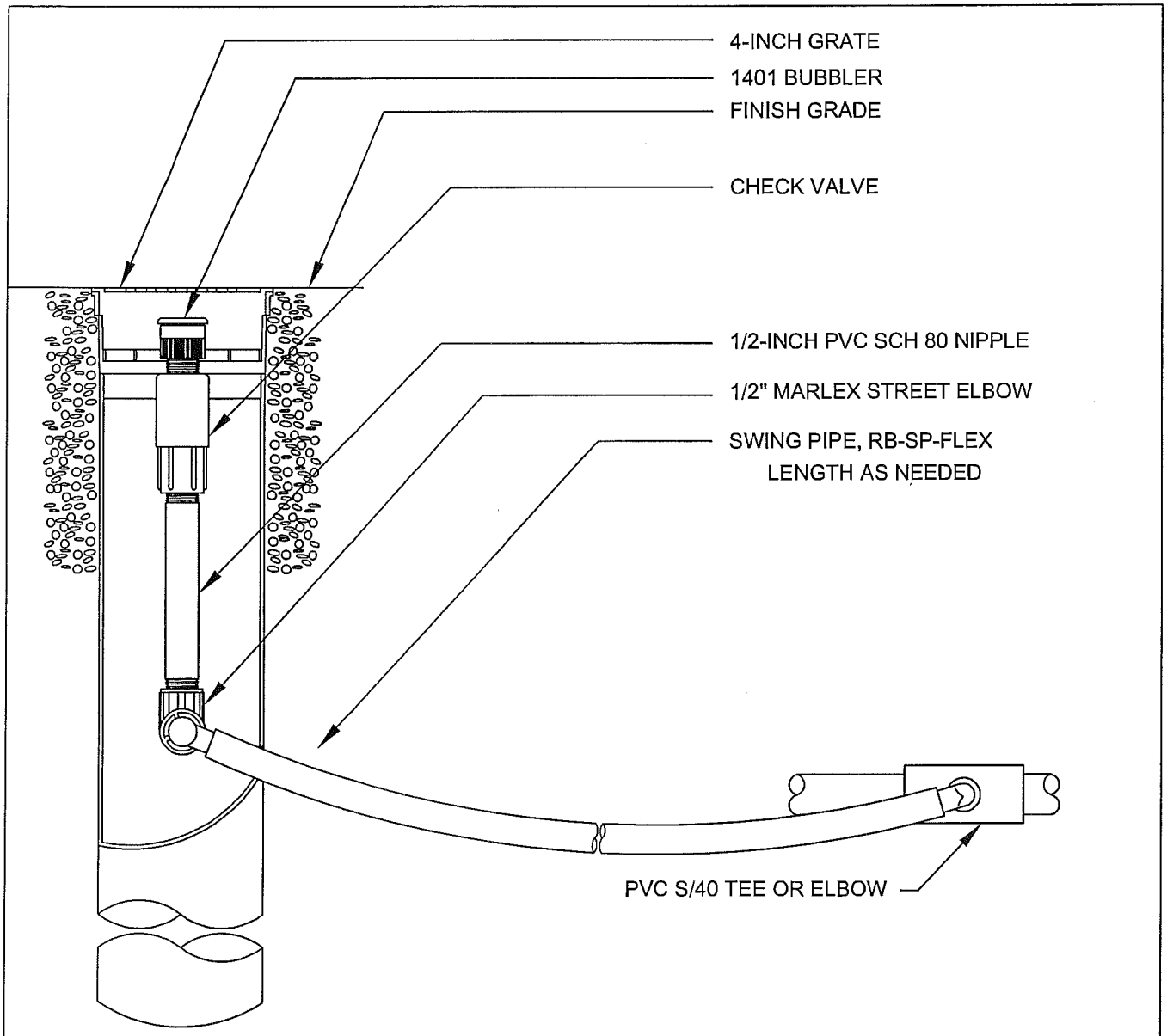

IRRIGATION DETAIL IRR-24
TREE WATERING SYSTEM

version: 01, revision: 00, date: 8/2006

DALE WINCHESTER &
ASSOCIATES
2215 East Pincrest Lane
Sandy UT 84092
801 571-6060

SOUTH JORDAN CITY
PARKS DEPARTMENT
1600 West Towne Center Drive
South Jordan, Utah 84095
(801) 254-3742

SOUTH JORDAN

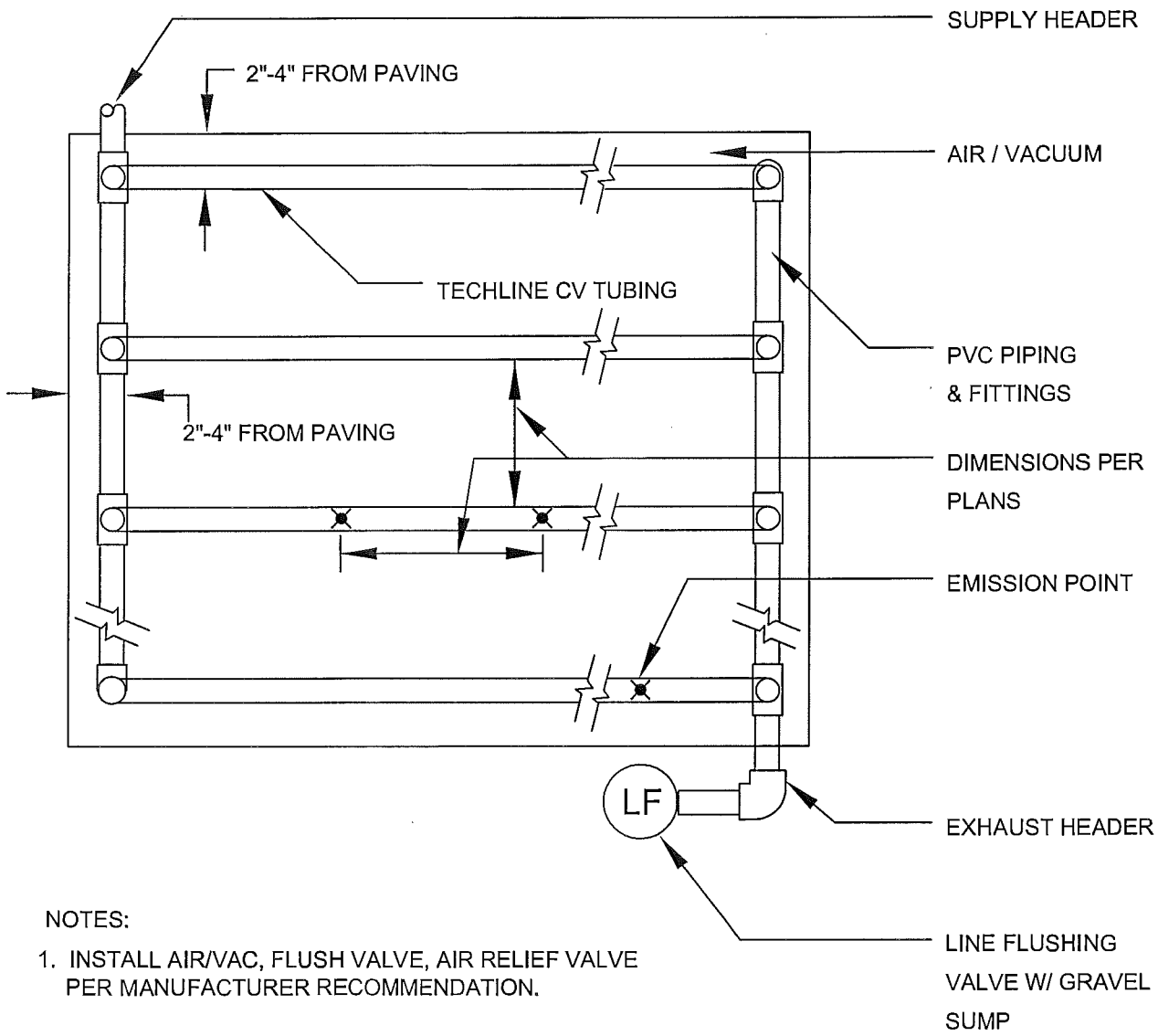

NOTES:

1. INSTALL AIR/VAC, FLUSH VALVE, AIR RELIEF VALVE PER MANUFACTURER RECOMMENDATION.

IRRIGATION DETAIL IRR-25
IN LINE DRIP GRID LAYOUT

version: 01, revision: 00, date: 8/2006

DALE WINCHESTER &
ASSOCIATES
2215 East Pincrest Lane
Sandy UT 84092
801 571-6060

SOUTH JORDAN CITY
PARKS DEPARTMENT
1600 West Towne Center Drive
South Jordan, Utah 84095
(801) 254-3742

SOUTH JORDAN

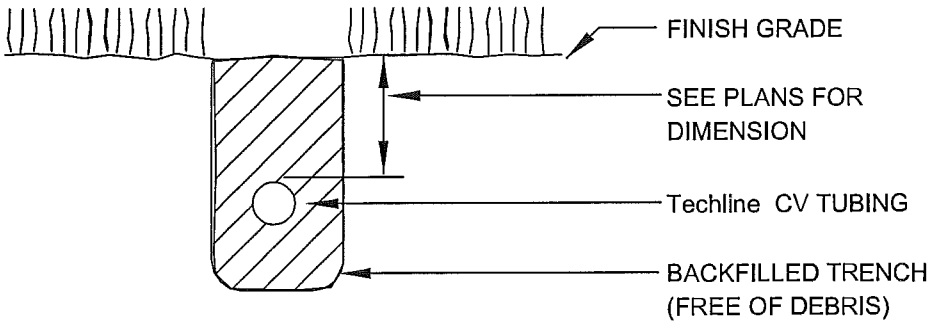

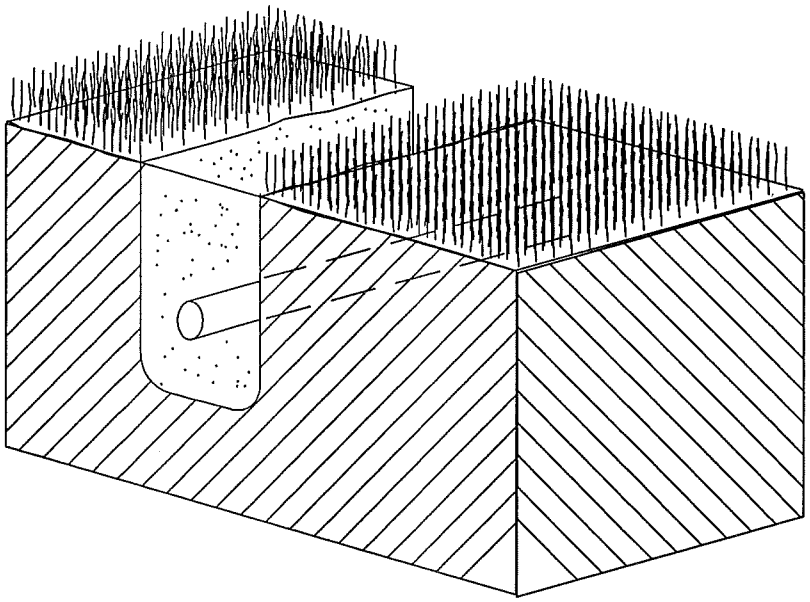

NOTES:

1. INSTALL AIR/VAC, FLUSH VALVE, AIR RELIEF VALVE PER MANUFACTURER RECOMMENDATION.

IRRIGATION DETAIL IRR-26
DRIP SUB SURFACE TURF

version: 01, revision: 00, date: 8/2006

DALE WINCHESTER & ASSOCIATES
2215 East Pincrest Lane
Sandy UT 84092
801 571-6060

SOUTH JORDAN CITY
PARKS DEPARTMENT
1600 West Towne Center Drive
South Jordan, Utah 84095
(801) 254-3742

SOUTH JORDAN

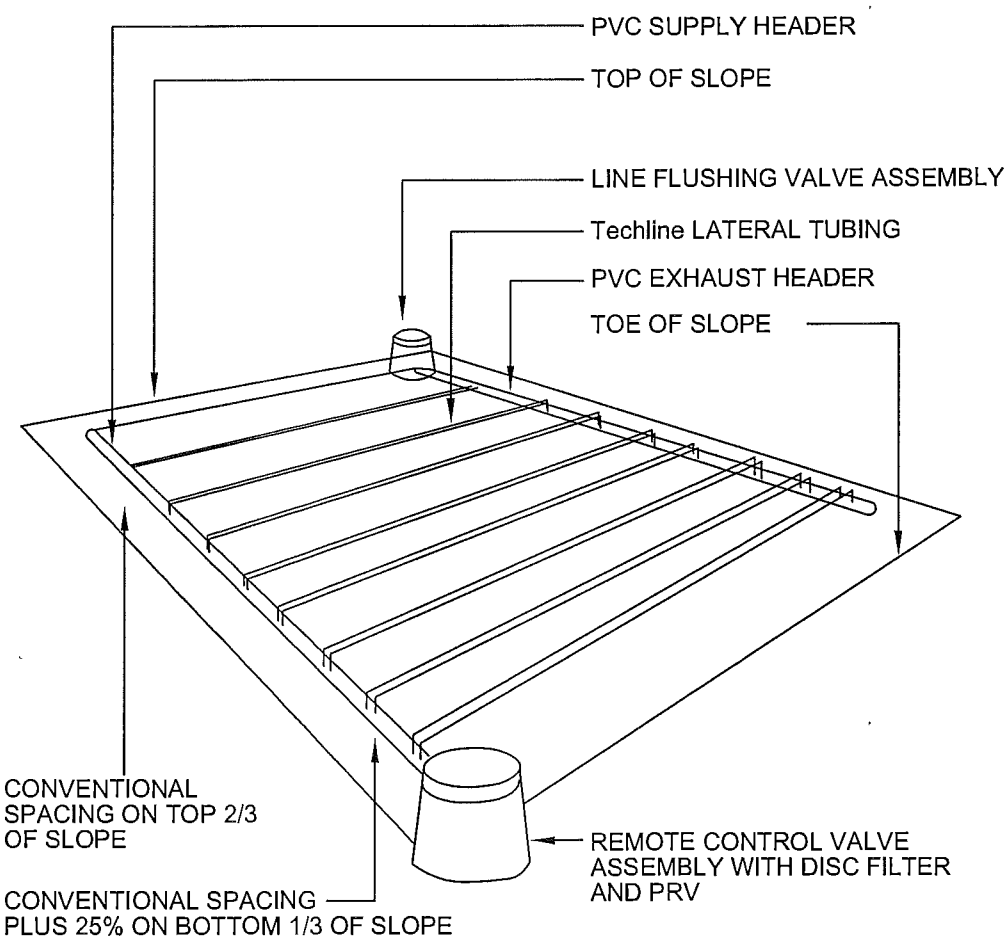

NOTE:
ALIGN Techline LATERALS PARRALLEL TO THE CONTOURS OF THE SLOPE

IRRIGATION DETAIL IRR-27
DRIP ON SLOPE

version: 01, revision: 00, date: 8/2006

DALE WINCHESTER & ASSOCIATES
2215 East Pincrest Lane
Sandy UT 84092
801 571-6060

SOUTH JORDAN CITY
PARKS DEPARTMENT
1600 West Towne Center Drive
South Jordan, Utah 84095
(801) 254-3742

SOUTH JORDAN

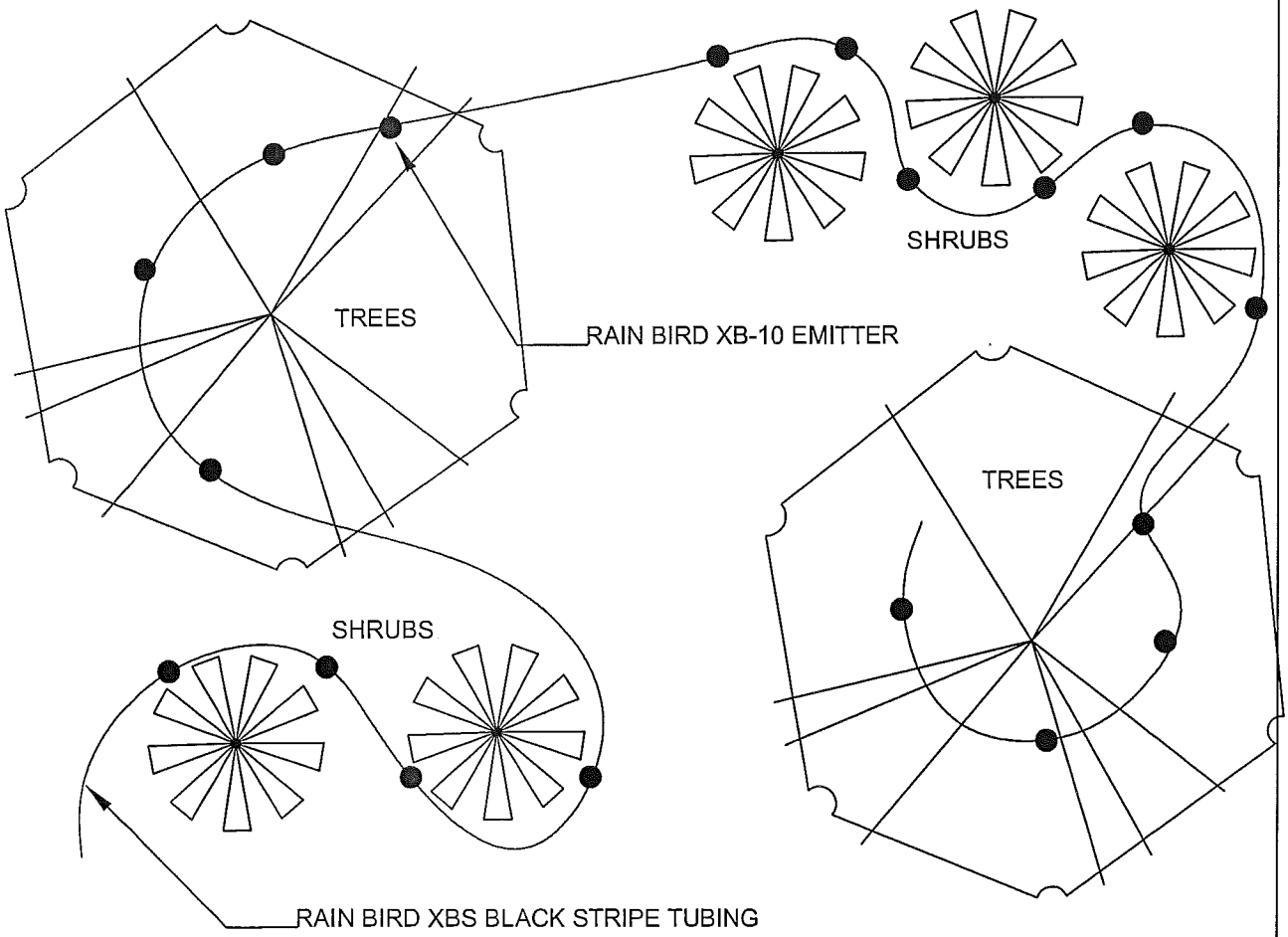

LOCATE EMITTERS ON UPHILL SIDE OF SHRUBS. ON
ON SLOPES PROVIDE WATER RETENTION BASIN
AROUND PLANT TO ALLOW WATER TO POOL

IRRIGATION DETAIL IRR-28
DRIP POINT SOURCE EMITTER

version: 01, revision: 00, date: 8/2006

DALE WINCHESTER &
ASSOCIATES
2215 East Pincrest Lane
Sandy UT 84092
801 571-6060

SOUTH JORDAN CITY
PARKS DEPARTMENT
1600 West Towne Center Drive
South Jordan, Utah 84095
(801) 254-3742

SOUTH JORDAN

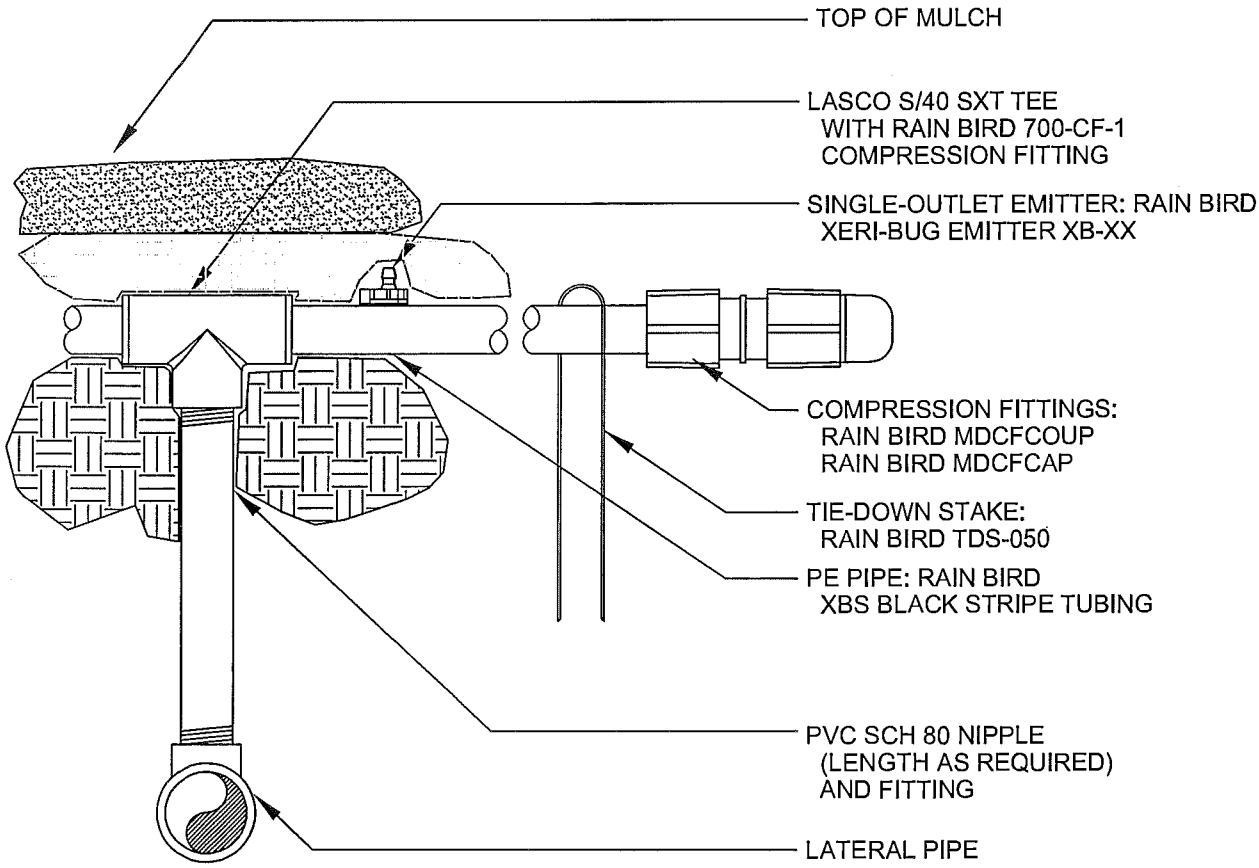

NOTE:
1. USE RAIN BIRD BUG GUN MODEL EMA-BG TO INSERT EMITTER DIRECTLY INTO XBS BLACK STRIPE TUBING.

IRRIGATION DETAIL IRR-29
DRIP PVC TO PE CONNECTION

version: 01, revision: 00, date: 8/2006

DALE WINCHESTER &
ASSOCIATES
2215 East Pincrest Lane
Sandy UT 84092
801 571-6060

SOUTH JORDAN CITY
PARKS DEPARTMENT
1600 West Towne Center Drive
South Jordan, Utah 84095
(801) 254-3742

SOUTH JORDAN

SECONDARY WATER

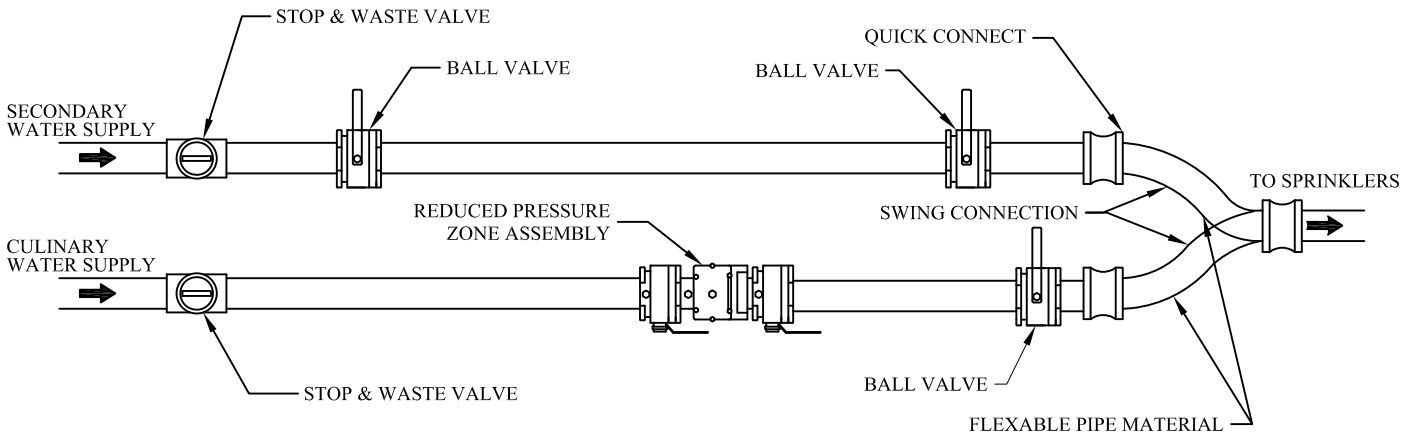

PLAN VIEW

NOT TO SCALE

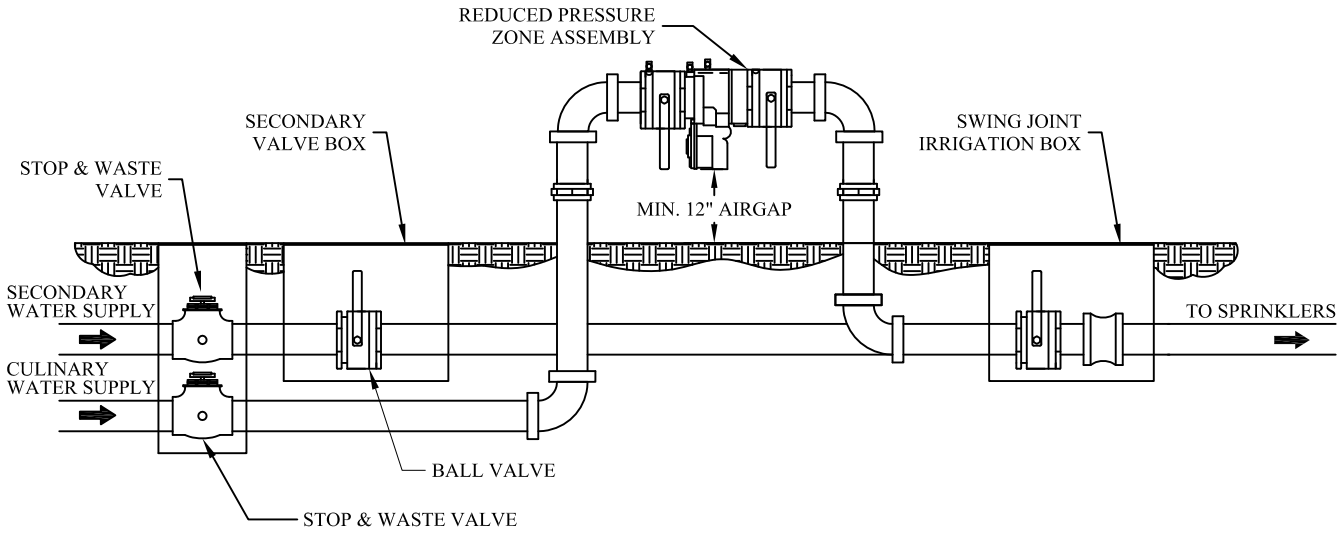

PROFILE VIEW

NOT TO SCALE

NOTES:

1. THE SWING CONNECTION IS INSTALLED SO THAT EITHER THE SECONDARY IRRIGATION WATER OR THE CULINARY WATER IS CONNECTED AND FEEDING THE SPRINKLER SYSTEM AT THE ONE TIME, NEVER BOTH.
2. THE REDUCED PRESSURE ZONE ASSEMBLY MUST BE LOCATED AT A MINIMUM OF 12" FROM WALL, FENCE OR OTHER OBSTACLE.
3. THE REDUCED PRESSURE ZONE ASSEMBLY MUST BE LOCATED AT A MINIMUM OF 12" ABOVE GRADE (NOT ALLOWED IN A PIT BELOW GRADE).
4. THE REDUCED PRESSURE ZONE ASSEMBLY MUST BE TESTED BY A CERTIFIED BACKFLOW TECHNICIAN ON AN ANNUAL BASIS.

SOUTH JORDAN CITY

DATE	REVISIONS	BY	DRAWN: KS	BACKFLOW PREVENTION DEVICE IRRIGATION CONNECTION	STANDARD DRAWING 2001
			DATE: 2/06		

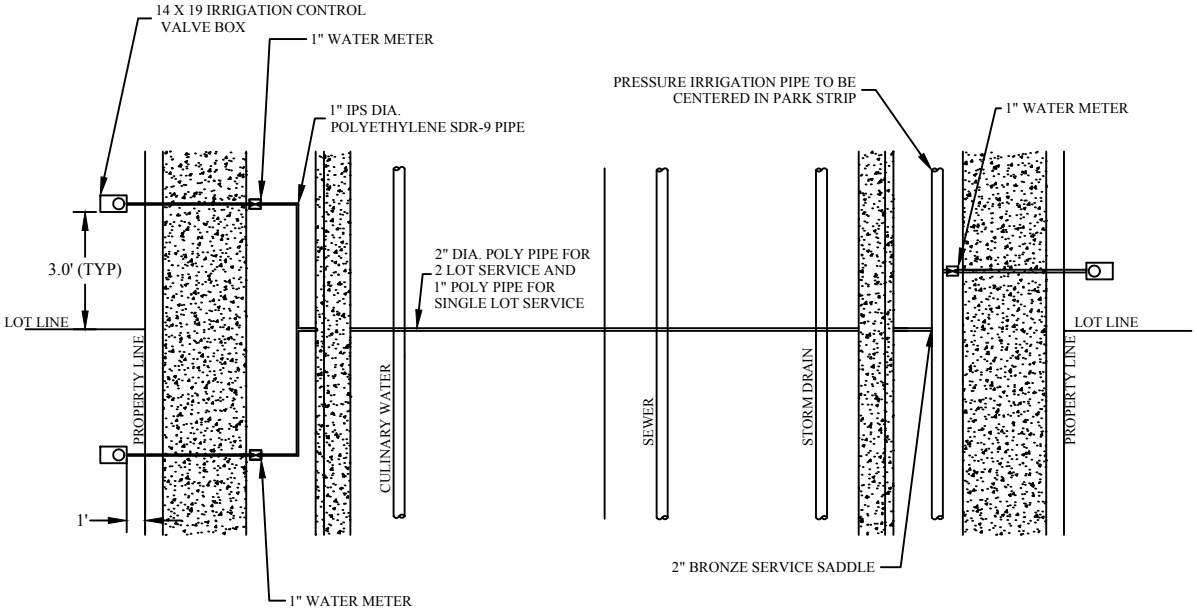

TYPICAL DOUBLE RISER DETAIL

NOT TO SCALE

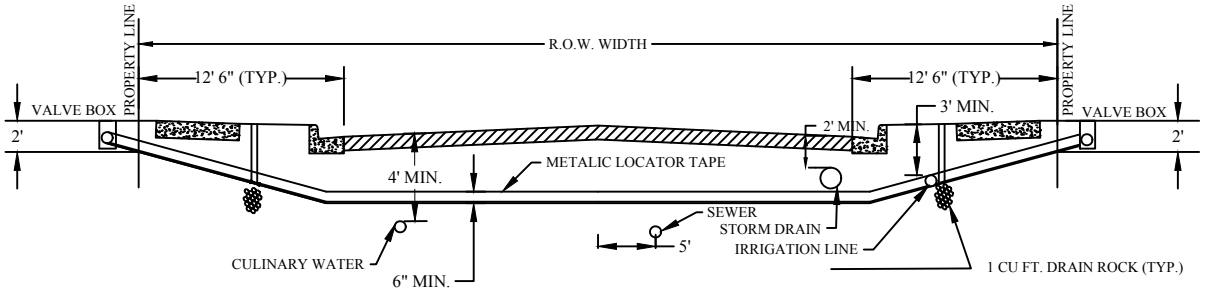

TYPICAL DOUBLE RISER DETAIL

NOT TO SCALE

SOUTH JORDAN CITY

DATE	REVISIONS	BY	DRAWN: KS	SECONDARY WATER LATERAL LAYOUT	STANDARD DRAWING 2002
			DATE: 2/06		

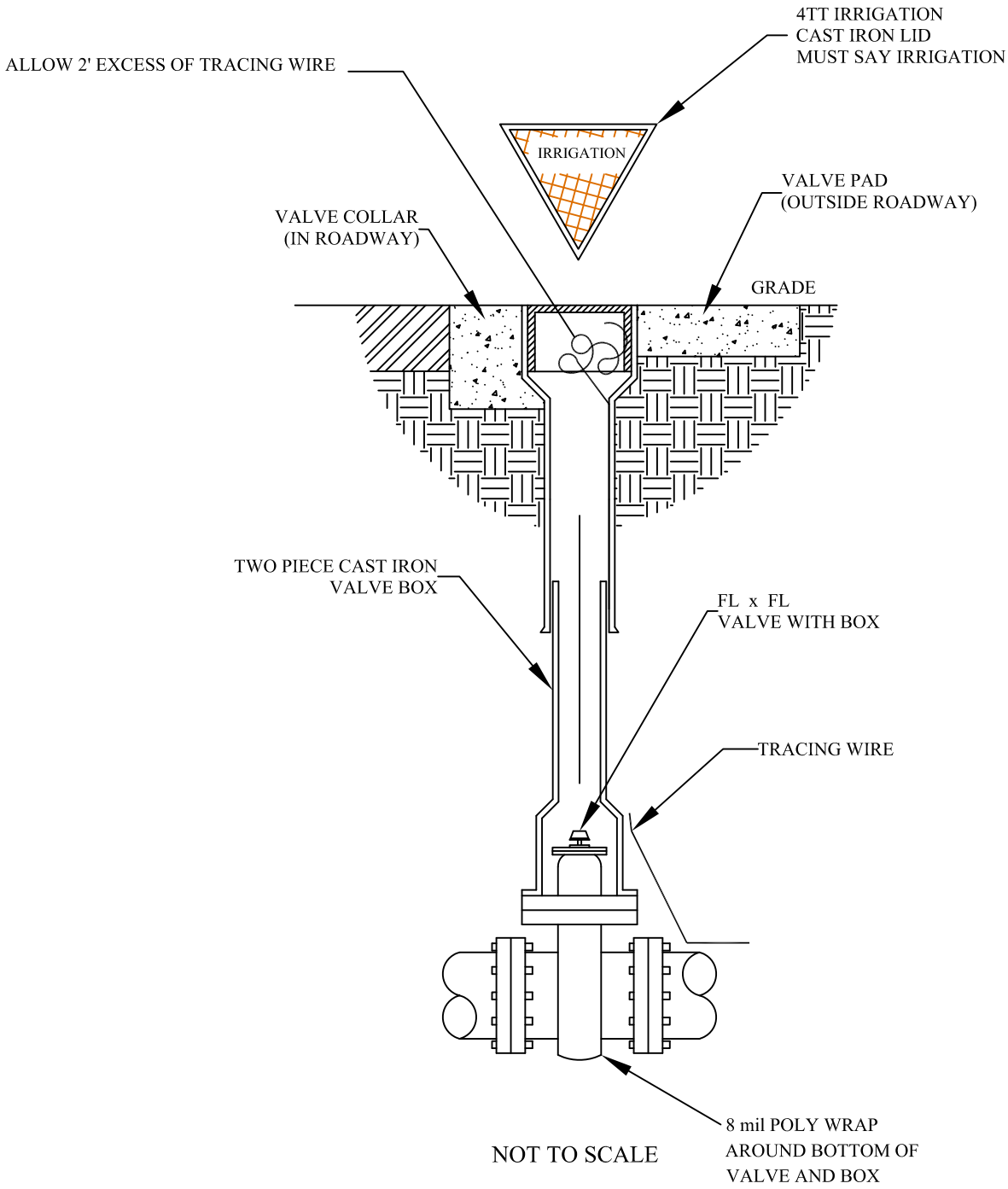

NOT TO SCALE

NOTES: 1. 14 GAUGE COPPER WIRE SHALL BE PLACED OUTSIDE OF BOTTOM OF BOX AND INSIDE TOP OF BOX

2. VALVE OPERATING NUTS SHALL BE WITHIN 3' TO THE FINISHED SURFACE. EXTENTIONS STEMS WITH ROCK SHIELDS SHALL BE PROVIDED WHERE DEPTHS EXCEED 4'.

PREPARED BY:_____

SOUTH JORDAN CITY

DATE	REVISIONS	BY	DRAWN: KS	VALVE BOX INSTALLATION	STANDARD DRAWING 2005
			DATE 1/06		

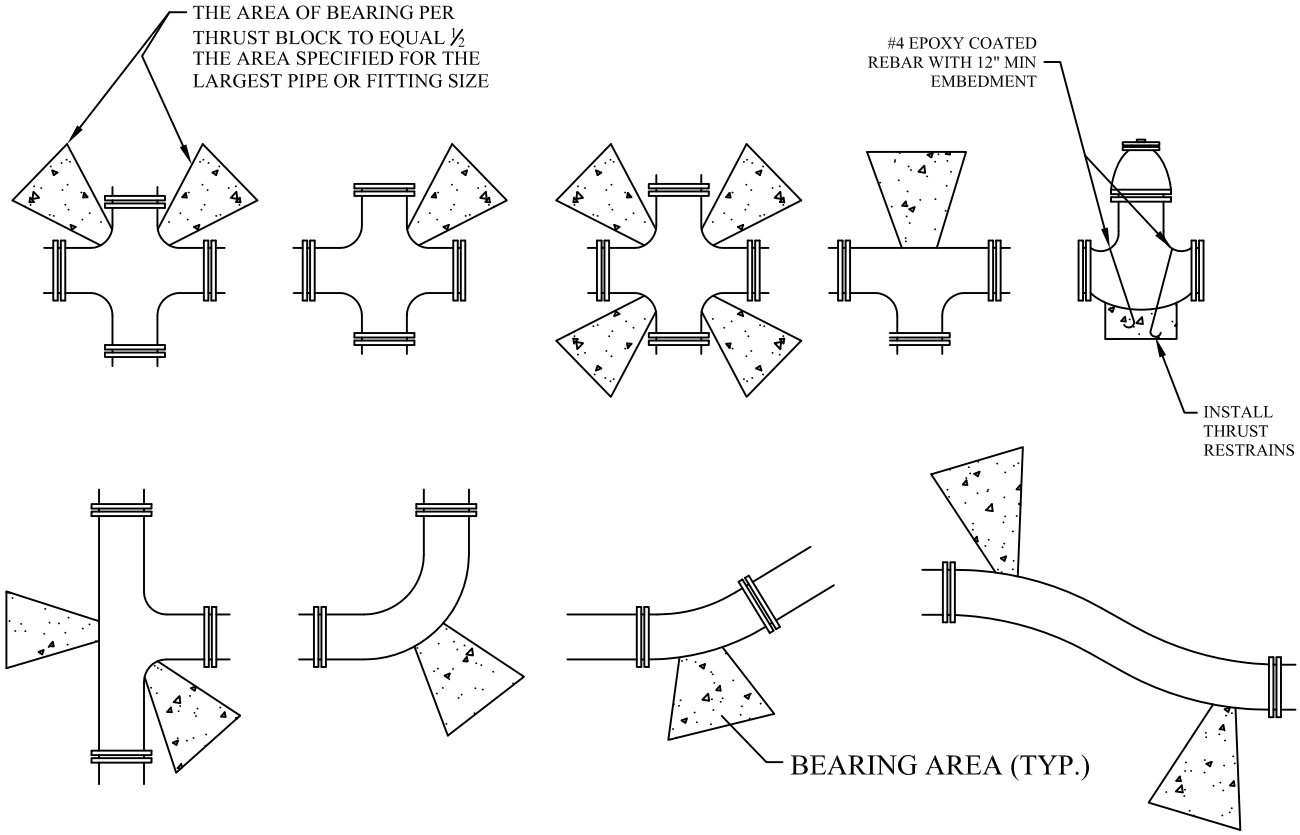

NOT TO SCALE

NOTES:
1. INSPECTION: PRIOR TO BACKFILLING AROUND THRUST BLOCK, SECURE INSPECTIONS OF INSTALLATION BY ENGINEER OR CITY INSPECTOR.
2. BACKFILL: INSTALL AND COMPACT ALL BACKFILL MATERIAL PER SPECIFICATIONS.
3. CONCRETE: CLASS 2,000 MINIMUM. POUR CONCRETE AGAINST UNDISTURBED SOIL.
4. PIPE JOINTS: DO NOT COVER WITH CONCRETE. LEAVE COMPLETELY ACCESSIBLE.
5. GREASE: APPLY POLY-FM GREASE TO ALL BURIED METAL SURFACES. WRAP WITH 8 MIL THICK POLYETHYLENE SHEET AND TAPE WRAP.
6. SPECIAL CONSTRUCTION REQUIREMENTS:
   A. THRUST DESIGN FOR PIPE SIZES OR CONFIGURATIONS NOT SHOWN REQUIRE SPECIAL DESIGN.
   B. BEARING AREAS, VOLUMES, AND SPECIAL THRUST BLOCKING DETAILS SHOWN ON DRAWINGS TAKE PRECEDENCE OVER THIS PLAN.
   C. REINFORCING STEEL BARS TO BE EPOXY COATED AT LEAST 15 MILS THICK. MINIMUM STRESS YIELD STRENGTH OF TIE DOWN BARS IS 70,000 PSI.
   D. LOCKING RESTRAINT DEVICES MAY BE USED IN CONJUNCTION WITH CONCRETE THRUST BLOCKING (AT OPTION OF ENGINEER).
   E. RESTRAINT SIZING IS BASED UPON A MAXIMUM OPERATING PRESSURE OF 150 PSI AND A TEST PRESSURE OF 200 PSI, AND A MINIMUM SOIL BEARING STRESS OF 2,000 PSF. OPERATING PRESSURES IN EXCESS OF 150 PSI OR SOILS WITH LESS THAN 2,000 POUND BEARING STRENGTH WILL REQUIRE SPECIAL DESIGN.
   F. CONCRETE MUST BE ALLOWED TO CURE IN THRUST RESTRAINTS FOR 5 DAYS PRIOR TO PRESSURIZING WATER LINES OR HAVE ADDITIONAL APPROVED THRUST RESTRAINTS INSTALLED PRIOR TO PRESSURIZING THE WATER LINE.
7. MEGALUGS REQUIRED ON ALL FITTINGS

MINIMUM BEARING AREA IN SQ. FT.					
SIZE OF PIPE	TEES, VALVES DEAD ENDS	90° BENDS	45° BENDS	22 1/2° BENDS	11 1/4° BENDS
4"	2	3	2	2	2
6"	4	5.5	3	1.5	1
8"	6.5	9.5	5	2.75	1.5
12"	14	20	11	5.5	3
14"	19	26.5	14.5	7.5	4
16"	24	34	18.5	9.5	6
20"	27	52	28.5	14.5	16
24"	53	74	41	21	53
30"	81	114	62	32	16

PREPARED BY:_____

SOUTH JORDAN UTAH

SOUTH JORDAN CITY

DATE	REVISIONS	BY

DRAWN:

DATE

DIRECT BEARING THRUST BLOCKS / TIE DOWN RESTRAINTS

STANDARD DRAWING
2006

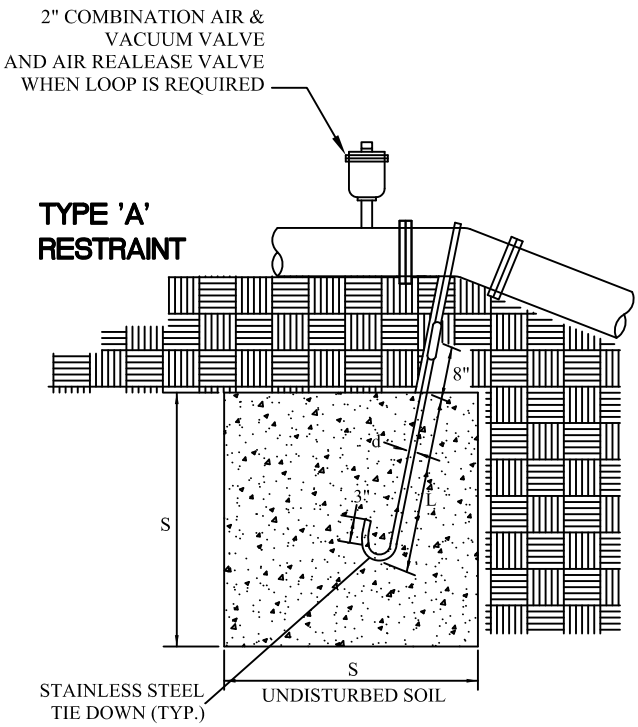

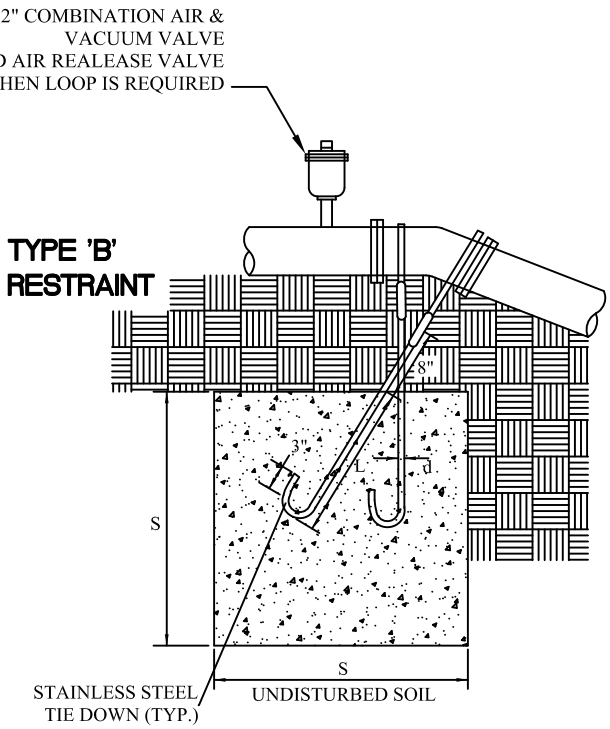

NOT TO SCALE

TYPE 'A' RESTRAINT

FOR 11 1/4°-22 1/2° VERTICAL BENDS

TABLE OF DIMENSIONS

	VB		S	d	L
PIPE SIZE NOMIN. DIAMETER - INCH	VERTICAL BEND DEGREES	NO. OF CU FT. OF CONC. BLOCKING	SIDE OF CUBE FEET	DIAMETER OF SHACK OR REBAR RODS - INCH	DEPTH OF RODS IN CONCRETE FT.
4"	11 1/4°	8	2.O	5/8"	1.5
	22 1/2°	15.6	2.5	5/8"	2.O
6"	11 1/4°	15.6	2.5	5/8"	2.O
	22 1/2°	34.3	3.25	5/8"	2.O
8"	11 1/4°	27	3.O	5/8"	2.O
	22 1/2°	64	4.O	5/8"	2.O
12"	11 1/4°	64	4.O	3/4"	2.O
	22 1/2°	125	5.O	3/4"	3.O
16"	11 1/4°	1O7	4.25	7/8"	3.O
	22 1/2°	216	6.O	7/8"	4.O
2O"	11 1/4°	138	5.17	1"	3.5
	22 1/2°	334	6.94	1"	4.O
24"	11 1/4°	24O	6.22	1"	4.O
	22 1/2°	476	7.81	1"	4.O
3O"	11 1/4°	369	7.17	1"	4.O
	22 1/2°	733	9.O2	1"	4.O

TYPE 'B' RESTRAINT

FOR 45° VERTICAL BENDS

TABLE OF DIMENSIONS

	VB		S	d	L
PIPE SIZE NOMIN. DIAMETER - INCH	VERTICAL BEND DEGREES	NO. OF CU C.Y. OF CONC. BLOCKING	SIDE OF CUBE FEET	DIAMETER OF SHACK OR REBAR RODS - INCH	DEPTH OF RODS IN CONCRETE FT.
4"	45°	1	3.O	5/8"	2.O
				5/8"	
6"	45°	2.37	4.O	5/8"	2.5
				5/8"	
8"	45°	3.97	4.75	5/8"	2.O
				5/8"	
12"	45°	9.O4	6.25	5/8"	4.O
				5/8"	
16"	45°	17.24	7.75	3/4"	4.O
				3/4"	
2O"	45°	26.52	8.95	3/4"	4.O
				3/4"	
24"	45°	37.82	1O.O7	3/4"	4.O
				3/4"	
3O"	45°	58.26	11.63	3/4"	4.O
				3/4"	

PREPARED BY: _____

SOUTH JORDAN
U T A H

SOUTH JORDAN CITY

DATE	REVISIONS	BY

DRAWN:

DATE

TIE DOWN THRUST RESTRAINTS

STANDARD DRAWING

2007

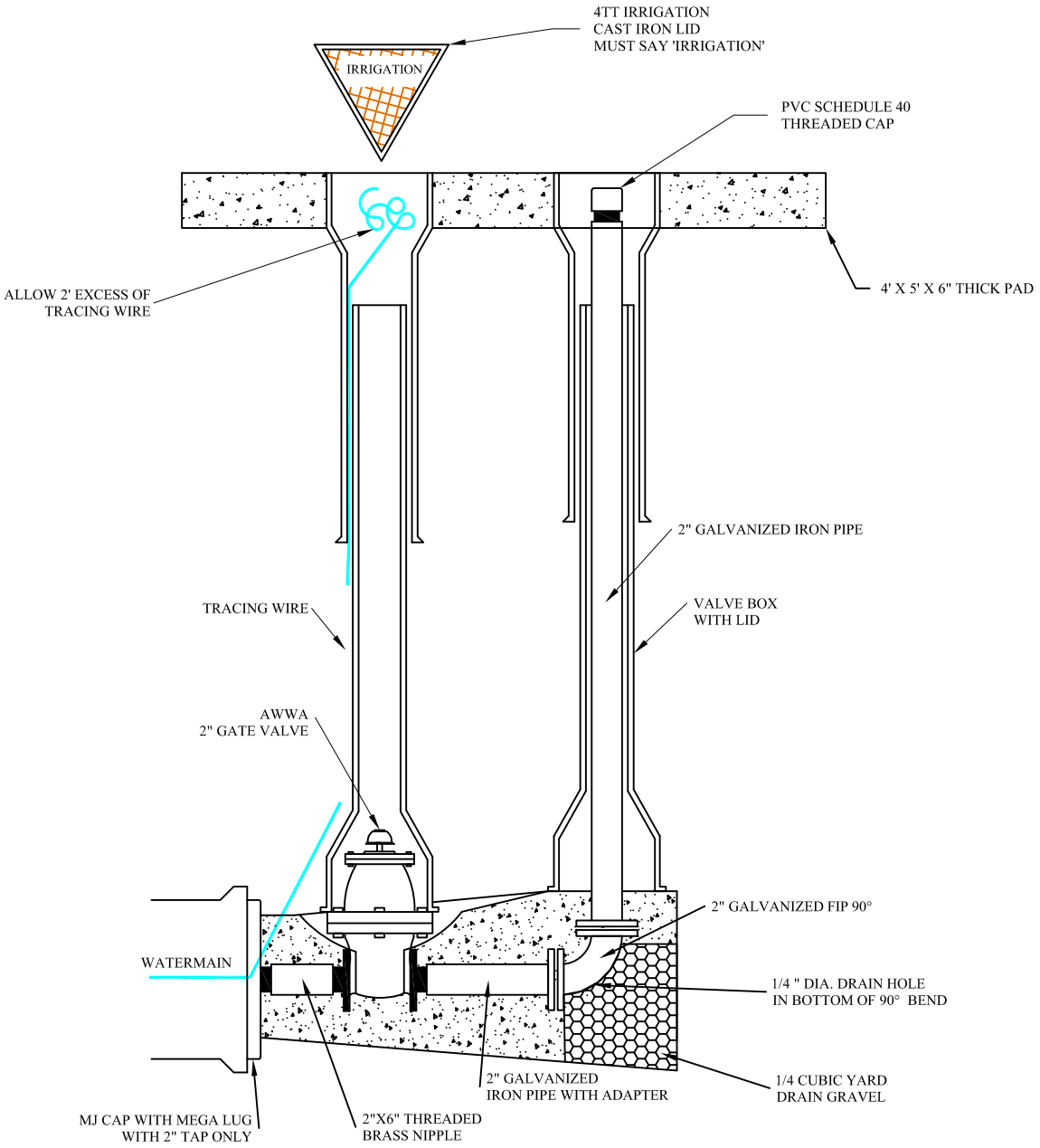

NOT TO SCALE

NOTES:

1. INSPECTION: PRIOR TO BACKFILLING AROUND THRUST BLOCK, SECURE INSPECTION OF INSTALLATION BY CITY ENGINEER.
2. BACKFILL: INSTALL AND COMPACT ALL BACKFILL MATERIAL PER SPECIFICATIONS.
3. CONCRETE: CLASS 2,000 MINIMUM. POUR CONCRETE AGAINST UNDISTURBED SOIL. THRUST BLOCK MUST MEET APWA.
4. TAPE: APPLY TAPE WRAP TO THE EXTERIOR OF ALL GALVANIZED PIPE PER AWWA C209
5. SPECIAL DESIGN: WATERMAINS 12" AND LARGER WILL REQUIRE SPECIAL WASHOUT ASSEMBLY DESIGN.
6. DRAINAGE: AFTER INSTALLATION OF WASHOUT VALVE ASSEMBLY, VERIFY THE WASHOUT VALVE RISER DRAINS TO GRAVEL.
7. WRAP ALL FOOTINGS PRIOR TO PLACEMENT OF THRUST BLOCKING

PREPARED BY: _____

SOUTH JORDAN CITY

DATE	REVISIONS	BY	DRAWN: / DATE	SECONDARY WASHOUT VALVE ASSEMBLY	STANDARD DRAWING 2008

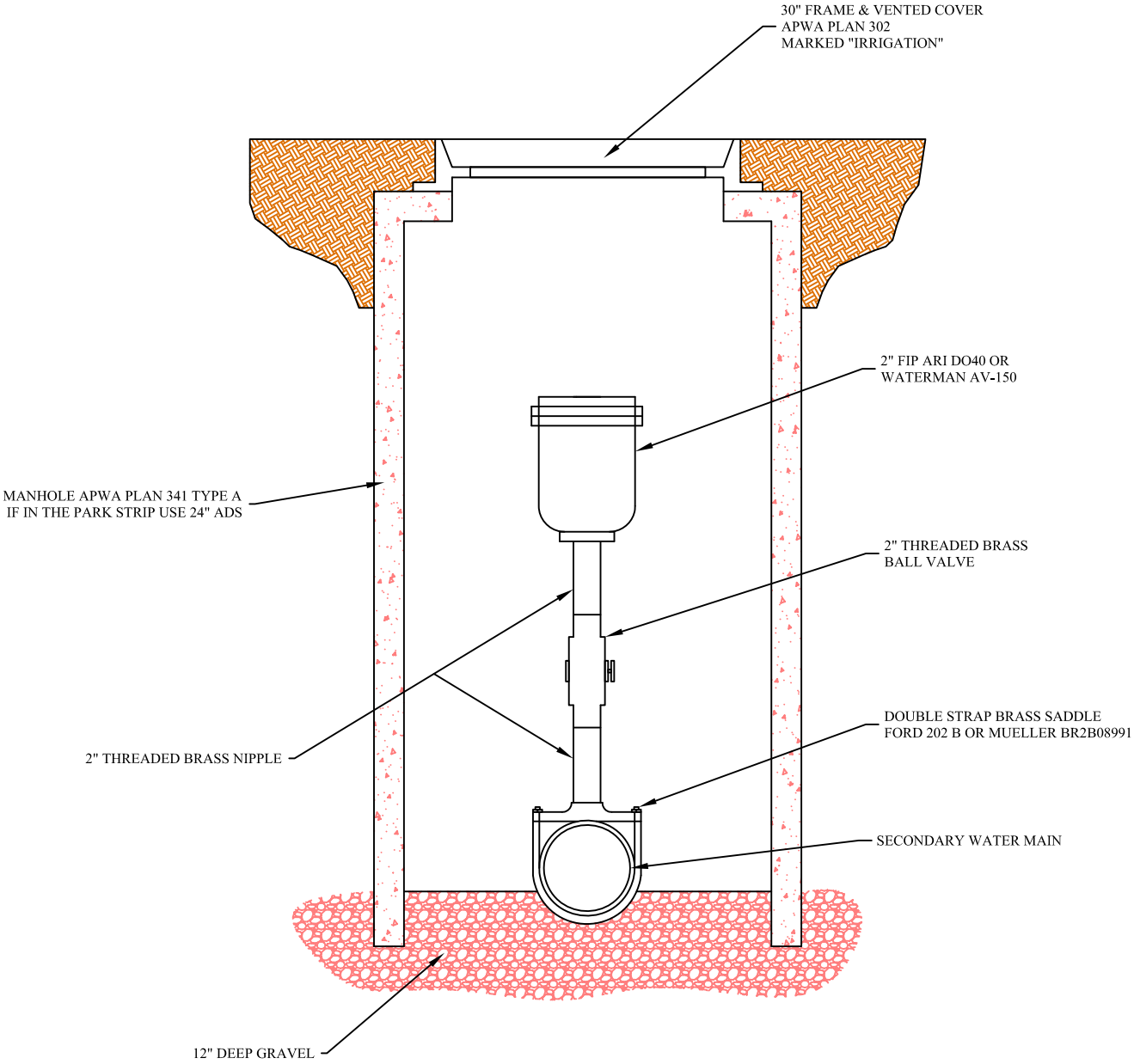

NOT TO SCALE

SOUTH JORDAN CITY

DATE	REVISIONS	BY	DRAWN: AP	SECONDARY WATER 2" AIR/VACUUM RELEASE VALVE	STANDARD DRAWING 2010
			DATE: 02/08		

Notes:
1. IRRIGATION WATERMAINS: LOCATED IN PARK STRIPS ON SOUTH AND WEST SIDE OF STREET
2. MINIMUM SIZE: 8"
3. VALVES: REQUIRED ON EACH LEG OF CONNECTION AND AT MAXIMUM 800 FOOT SPACING
4. ADDITIONAL REQUIREMENTS: CAPS, VALVES, BLOWOFFS, DRAINS, AIR VALVES AND SERVICE CONNECTIONS MAY BE REQUIRED.

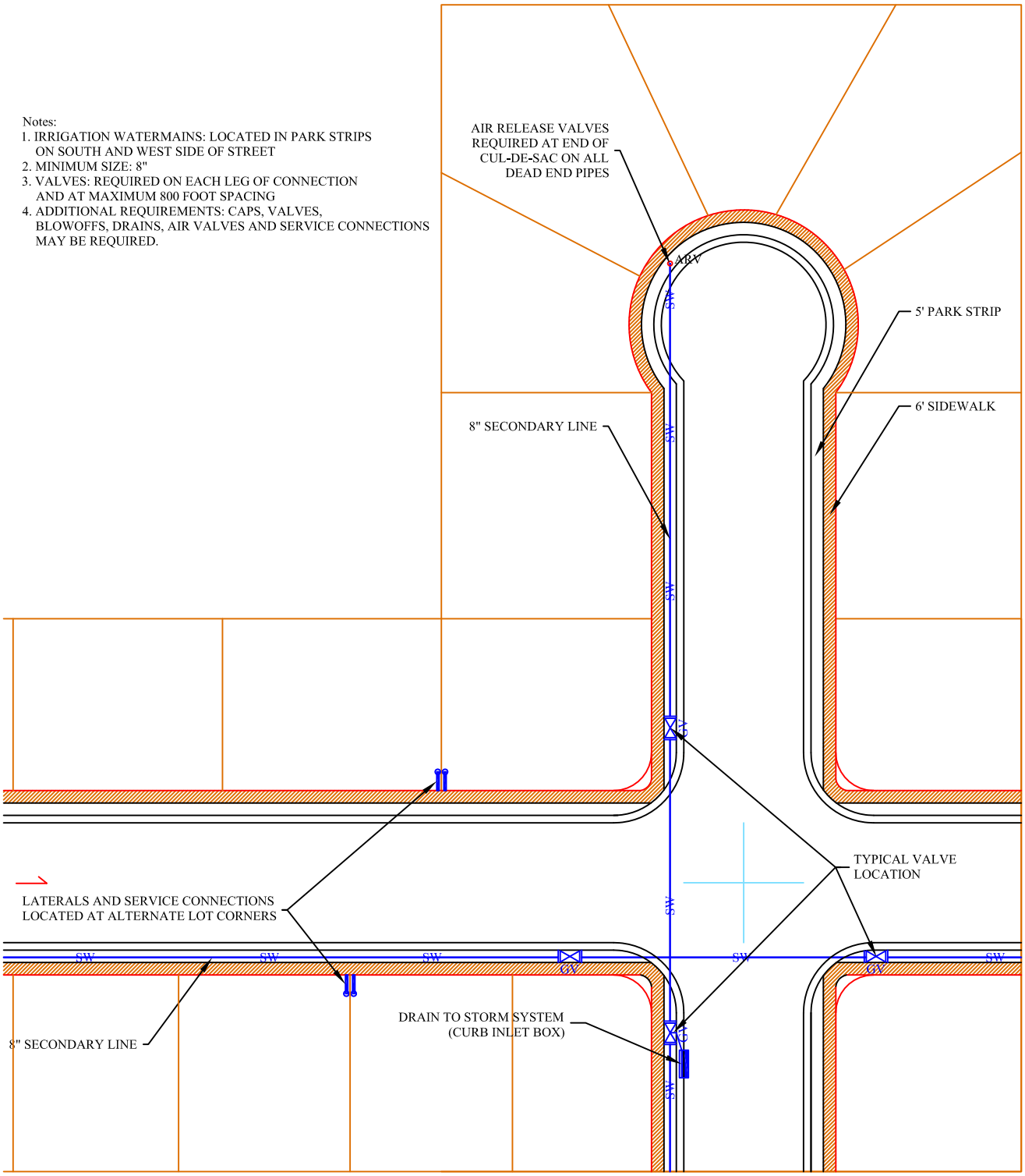

NOT TO SCALE

SOUTH JORDAN UTAH

SOUTH JORDAN CITY

DATE	REVISIONS	BY	DRAWN: AP	SECONDARY RESIDENTIAL INSTALLATION	STANDARD DRAWING 2011
			DATE: 02/08		

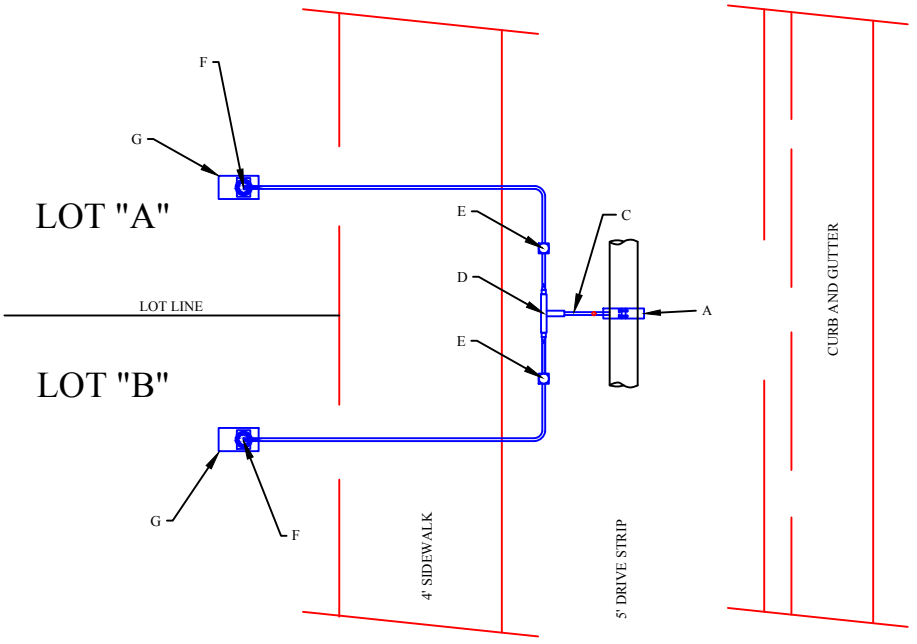

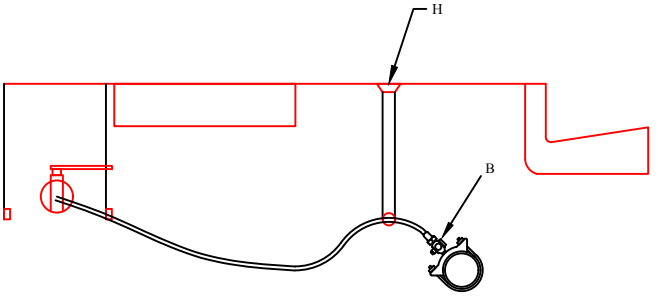

SIZE	DESCRIPTION	SIZE	COMMENTS
A	TAPPING SADDLE	VARIES	BRASS DOUBLE STRAP SADDLE FORD 202B OR MUELLER BR2B08991
B	2" CTS x MIP ADPT.		FORD C84-72QNL OR MUELLER H15428N
C	POLY PIPE	2"	CTS, PURPLE SDR 9
D	TEE AND 2 x 1 BUSHINGS	2"	BRASS
E	WATER METER	1"	
F	BALL VALVE	1"	BALVE VALVE w/ HANDLE
G	SERVICE BOX	12" x 18"	IRRIGATION CONTROL VALVE BOX CARSON 1419-B-12
H	WATER METER BOX		FORD METER BOX LYLBB111-444-C16171-001-NL

NOT TO SCALE

SOUTH JORDAN

SOUTH JORDAN CITY

DATE	REVISIONS	BY	DRAWN: AP DATE: 02/08	SECONDARY WATER SERVICE CONNECTION	STANDARD DRAWING 2012

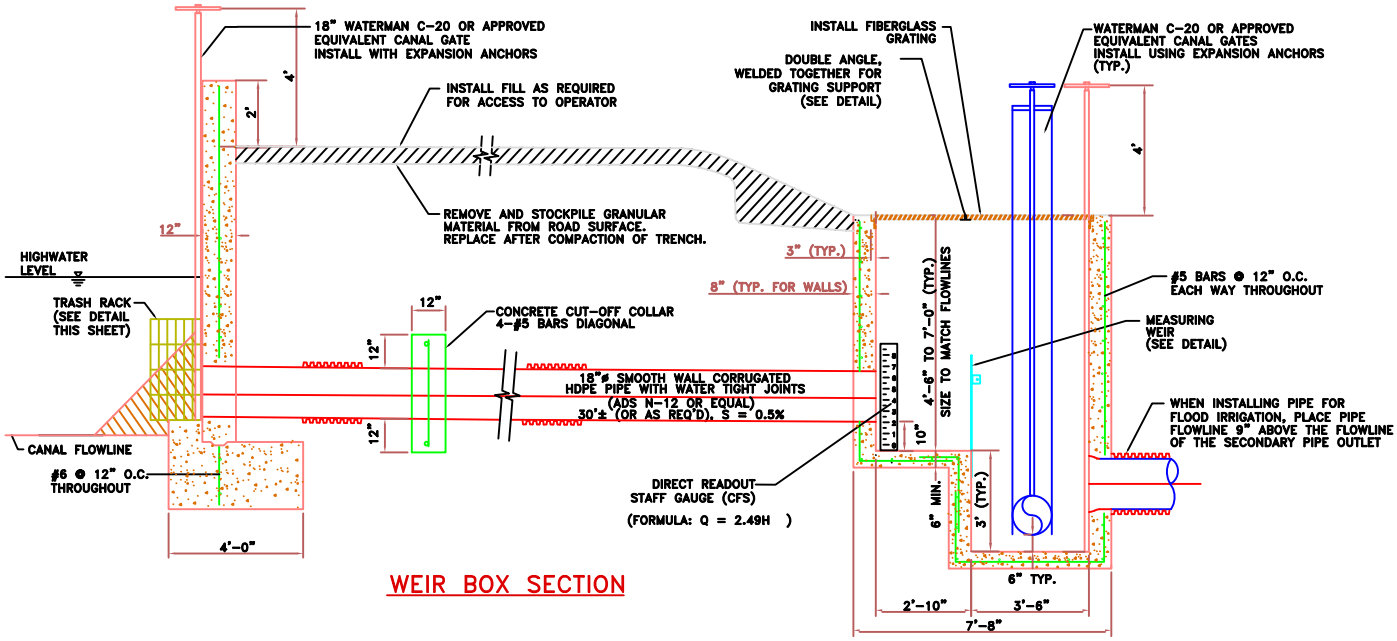

WEIR BOX SECTION

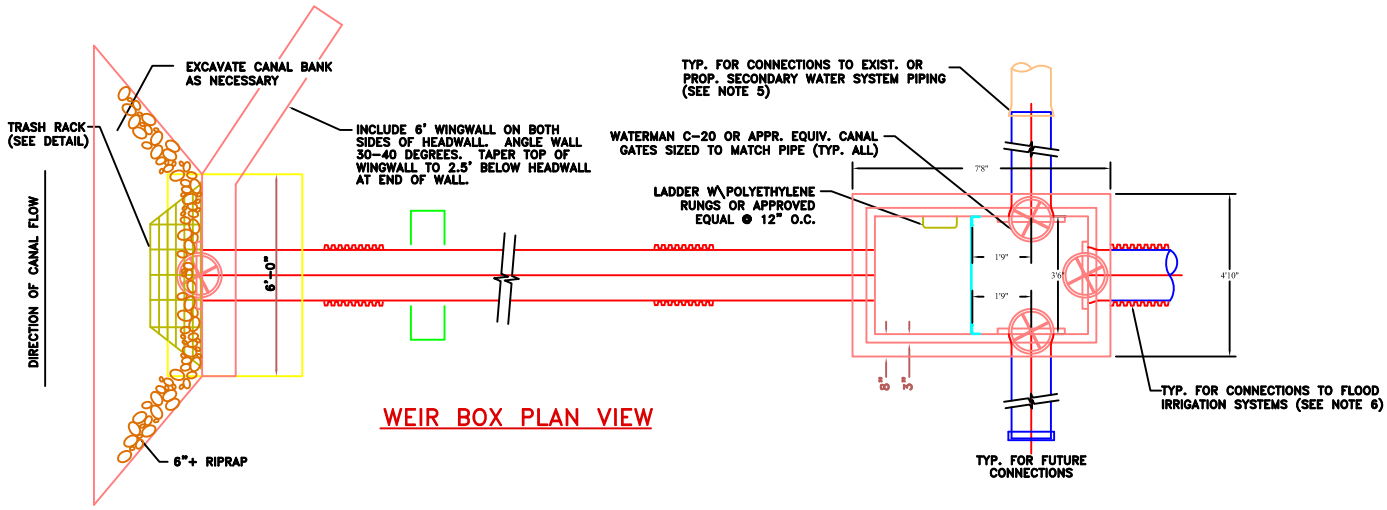

WEIR BOX PLAN VIEW

NOT TO SCALE

SOUTH JORDAN UTAH

SOUTH JORDAN CITY

DATE	REVISIONS	BY	DRAWN: TB	PRESSURE IRRIGATION CANAL GATE AND WEIR BOX	STANDARD DRAWING 2014
			DATE: 11/07		

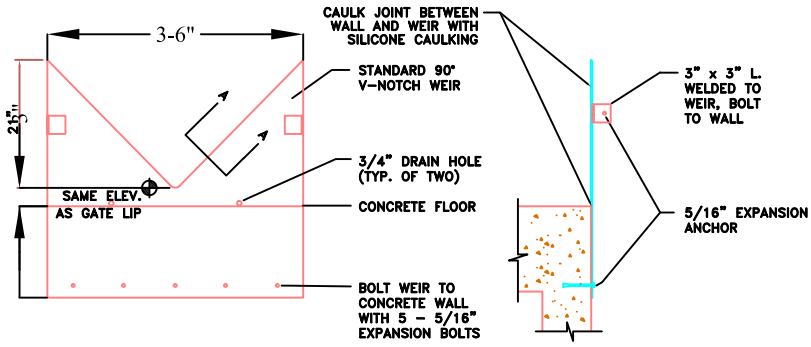

WEIR FRONT VIEW

WEIR SIDE VIEW

NOTE:
WEIR TO BE HOT-DIP GALVANIZED AFTER FABRICATION

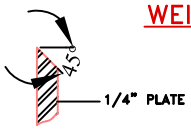

SECTION A-A

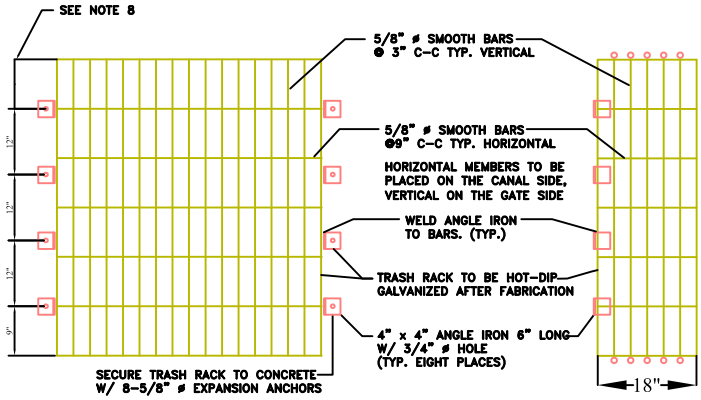

FRONT VIEW

SIDE VIEW

TRASH RACK DETAILS

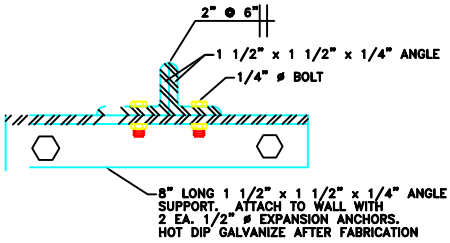

DOUBLE-ANGLE GRATING SUPPORT DETAIL

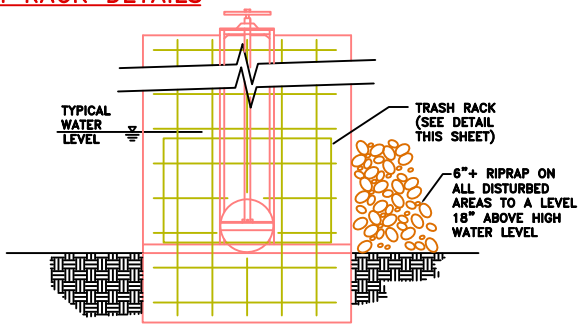

SLIDE GATE DETAIL
N.T.S.

NOT TO SCALE

SOUTH JORDAN

SOUTH JORDAN CITY

DATE	REVISIONS	BY	DRAWN: TB	PRESSURE IRRIGATION CANAL GATE AND WEIR BOX	STANDARD DRAWING 2015
			DATE: 11/07		

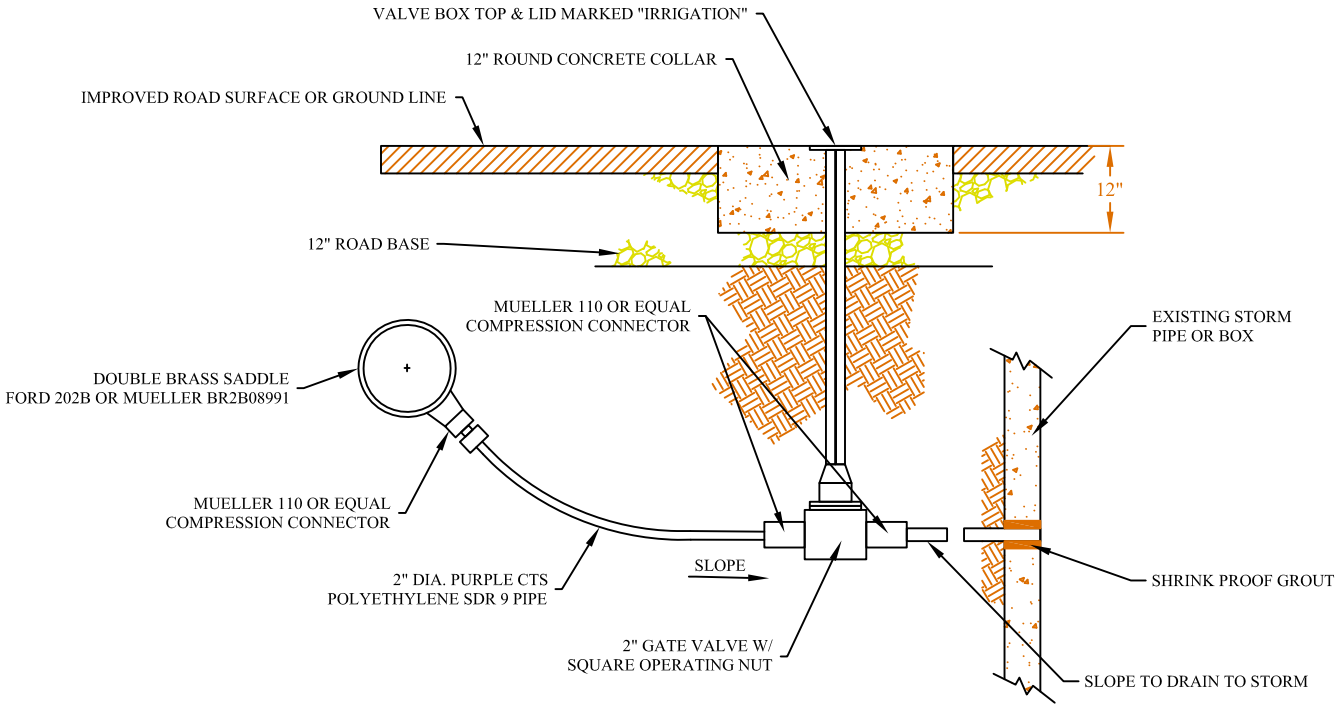

2" DRAIN VALVE DETAIL

NOT TO SCALE

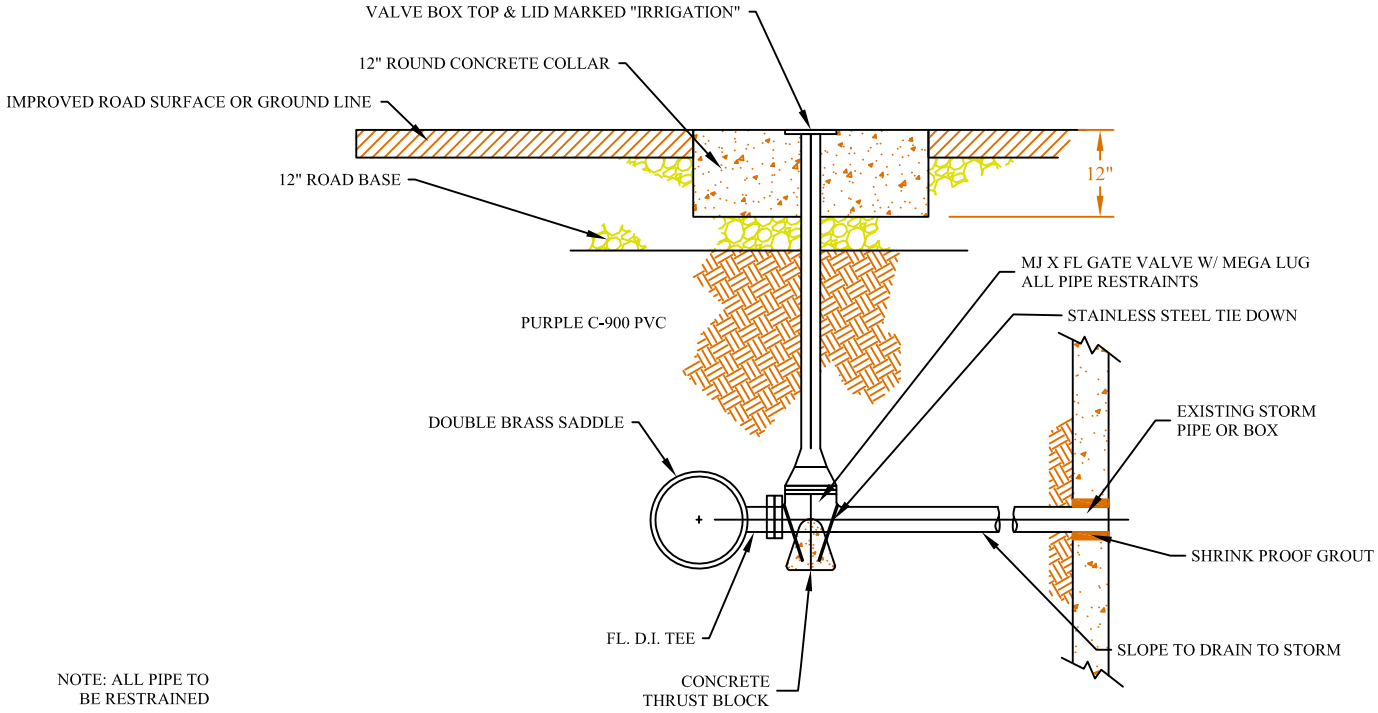

NOTE: ALL PIPE TO
BE RESTRAINED

4" AND LARGER DRAIN VALVE DETAIL

NOT TO SCALE

SOUTH JORDAN

SOUTH JORDAN CITY

DATE	REVISIONS	BY	DRAWN: AP DATE: 02/08	2" AND 4" DRAIN VALVE DETAIL	STANDARD DRAWING 2016

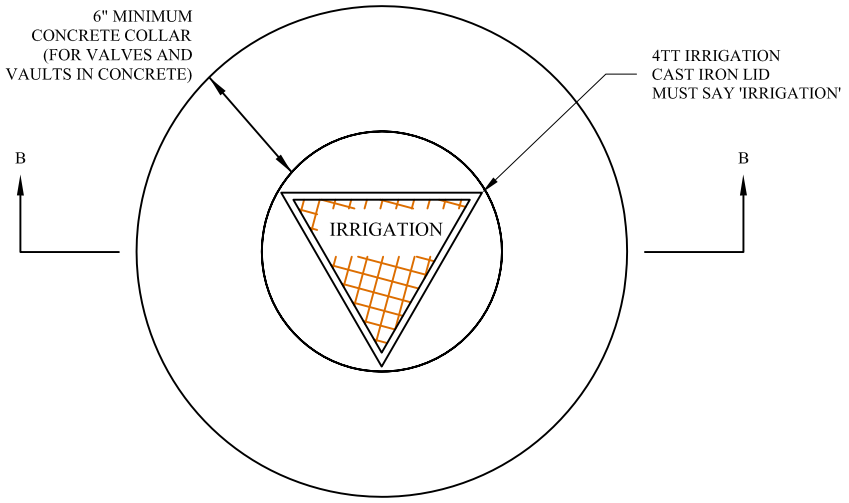

PLAN VIEW

NOT TO SCALE

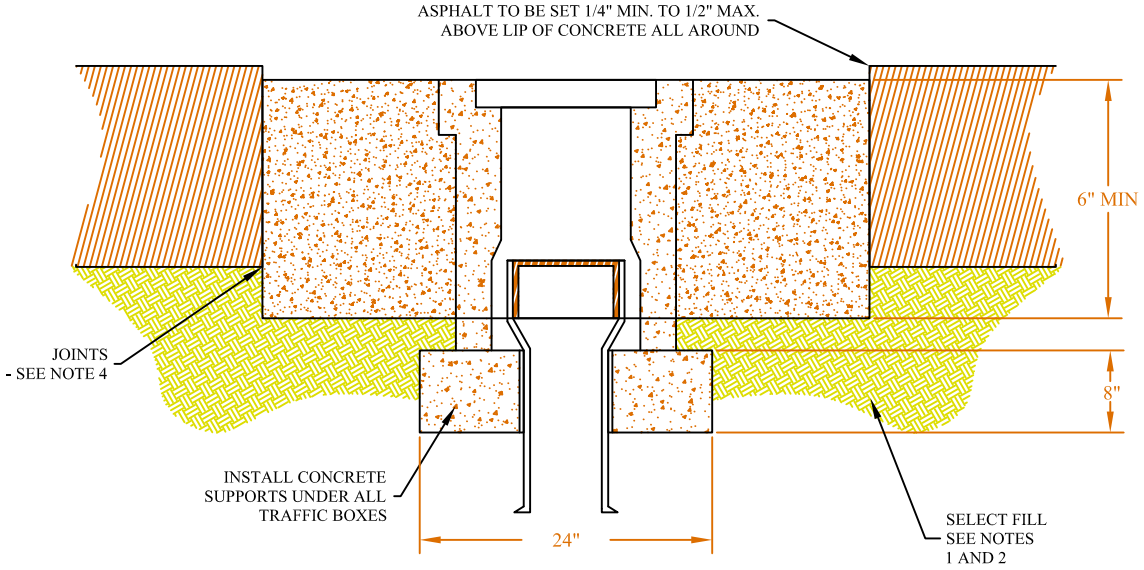

SECTION B-B

NOT TO SCALE

NOTES

1. BACKFILL: INSTALL AND COMPACT ALL BACKFILL MATERIAL PER SPECIFICATIONS.
2. SELECT FILL: USE UNTREATED BASE COURSE GRADE 3/4" MAXIMUM PER SPECIFICATONS. USE OF SEWER ROCK OR RECYCLED AGGREGATE REQUIRES ENGINEER'S WRITTEN APPROVAL.
3. CONCRETE: CLASS 4,000. APPLY A SEALING/COURING COMPOUND PER SPECIFICATONS.
4. JOINTS: PROVIDE A NEAT STRAIGHT JOINT BETWEEN EXISTING AND NEW ASPHALT CONCRETE SURFACES. PROVIDE CONCENTRIC CIRCLE CUT. CLEAN EDGES OF ALL DIRT, OIL AND LOOSE DEBRIS.

SOUTH JORDAN
U T A H

SOUTH JORDAN CITY

DATE	REVISIONS	BY	DRAWN: AP DATE: 02/08	COVER COLLAR (IN PAVEMENT)	STANDARD DRAWING 2017

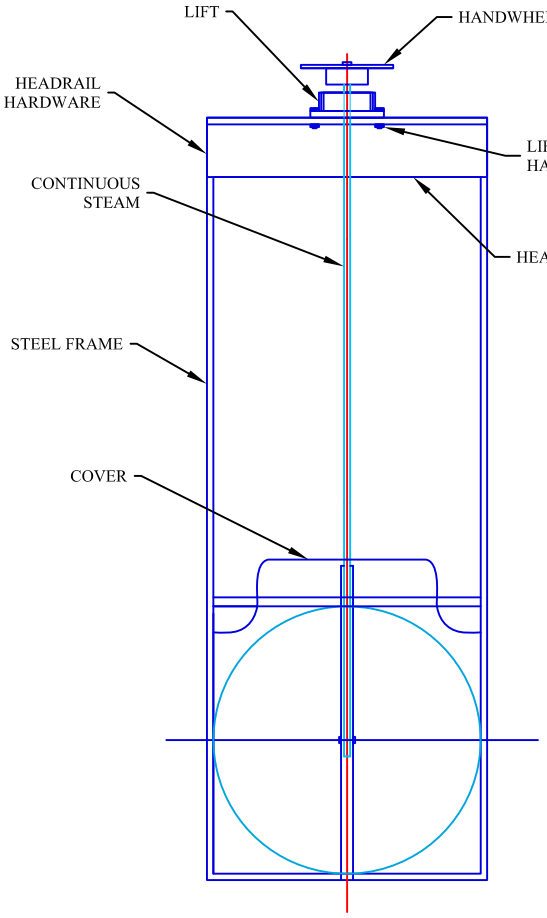

VIEW A
NOT TO SCALE

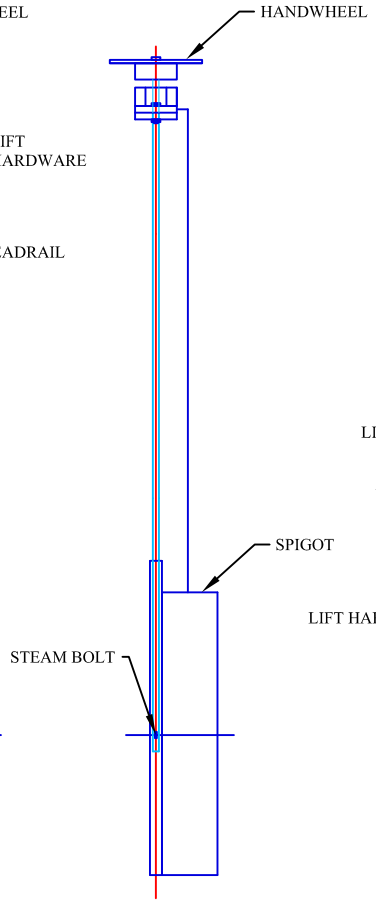

VIEW B
NOT TO SCALE

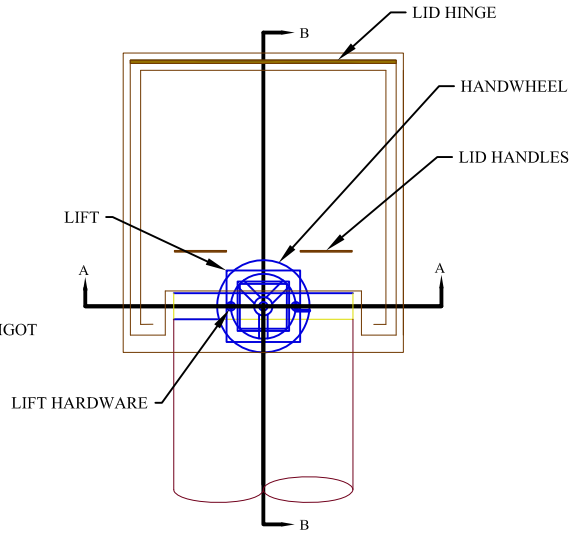

PLAN VIEW
NOT TO SCALE

NOTES

1. MANUFACTURER: WATERMAN INDUSTRIES, INC.
2. MATERIAL: ALUMINUM OR STAINLESS STEEL
3. IRRIGATION COMPANY MUST APPROVE.

SOUTH JORDAN
U T A H

SOUTH JORDAN CITY

DATE	REVISIONS	BY	DRAWN: AP	IRRIGATION SLIDE GATE DETAIL	STANDARD DRAWING 2020
			DATE: 02/08		

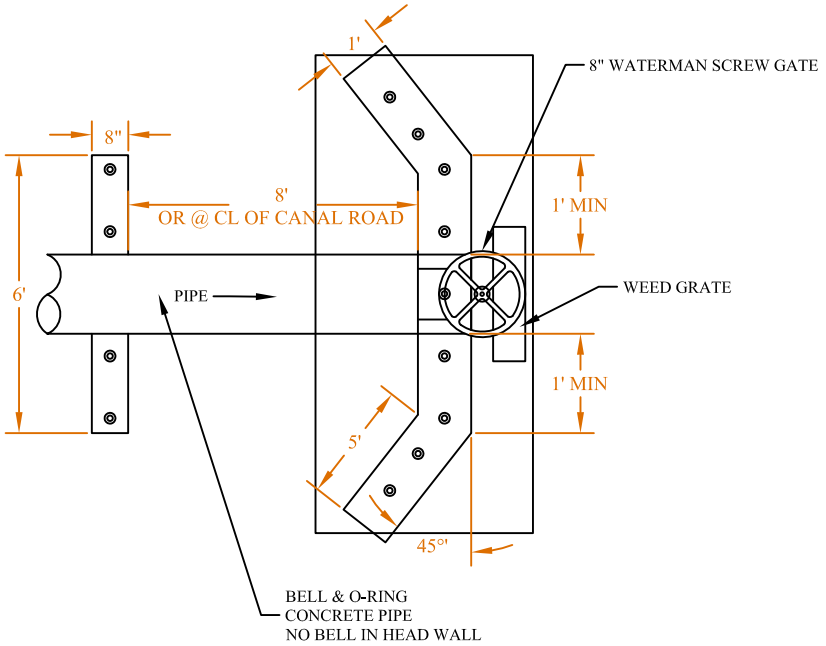

TOP VIEW

NOT TO SCALE

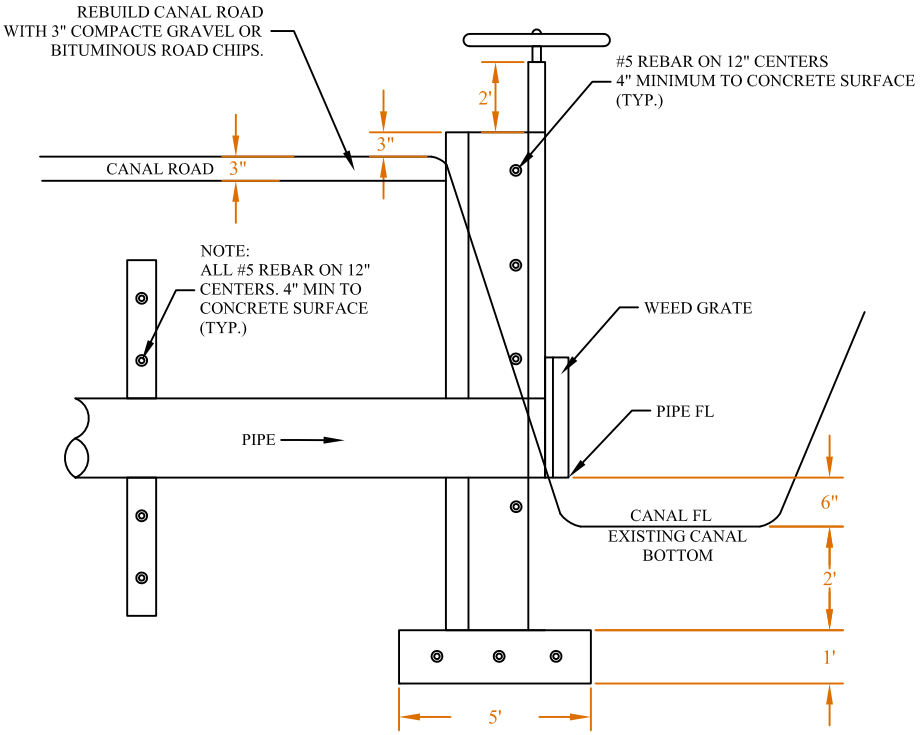

SIDE VIEW

NOT TO SCALE

SOUTH JORDAN
UTAH

SOUTH JORDAN CITY

DATE	REVISIONS	BY	DRAWN: AP	HEADWALL DETAIL	STANDARD DRAWING 2021
			DATE: 02/08		

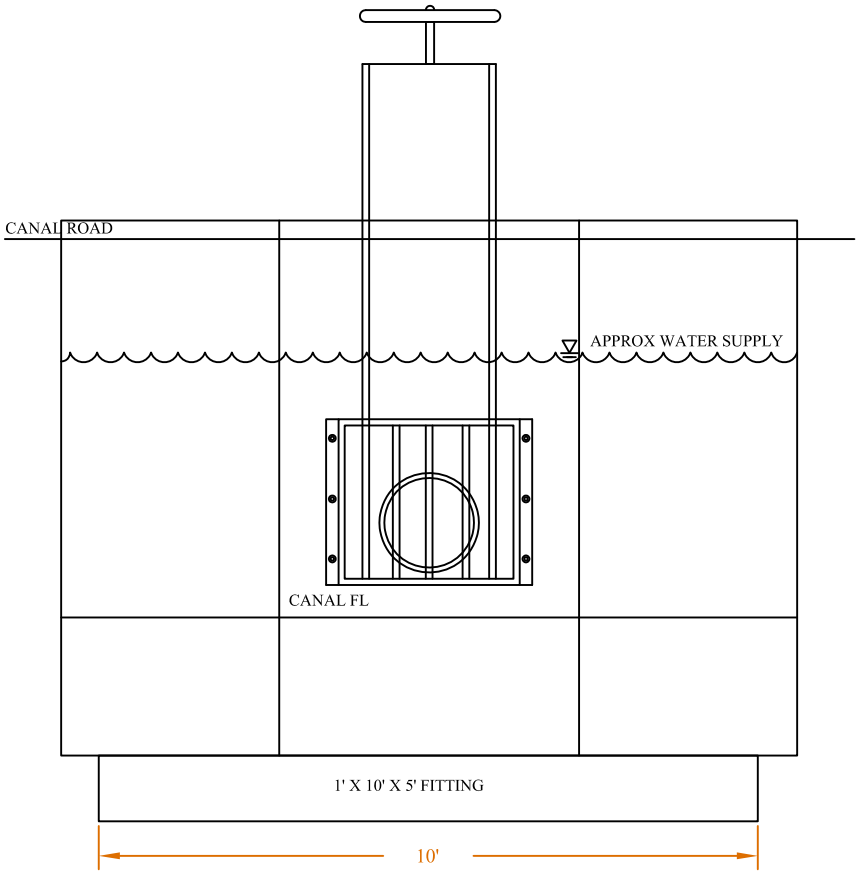

FRONT VIEW
NOT TO SCALE

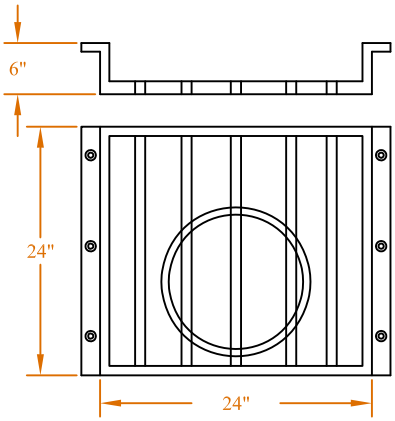

WEED GRATE
NOT TO SCALE

NOTES

1. ALL ATTACHING BOLTS ARE TO BE 5/8" STAINLESS STEEL.
2. BACKFILL WITH IMPENETRABLE CLAY.
3. ALL MATERIALS AND WORK TO MEET UDOT STANDARDS 96% COMPACTION.
4. CONTROL OUTLET VELOCITY IN ORDER TO KEEP WATER FROM RUNNING OVER EXISTING CONCRETE BOX.
5. INSURANCE. THE CONTRACTOR WORKING ON THE CANAL SHALL OBTAIN AND MAINTAIN DURING THE CONSTRUCTION PERIOD, GENERAL LIABILITY INSURANCE IN THE AMOUNT OF AT LEAST $1,000,000 (ONE MILLION DOLLARS FOR INJURY, DEATH, OR PROPERTY DAMAGE ARISING OUT OF A SINGLE OCURRENCE AND WORKMAN'S COMPENSATION INSURANCE AS REQUIRED BY THE STATE OF UTAH. THE COMPANY SHALL REQUIRE THEIR INSURANCE
6. ALL WORK SHALL START AFTER OCTOBER 15TH AND BE COMPLETED BEFORE APRIL 1ST.

SOUTH JORDAN
UTAH

SOUTH JORDAN CITY

DATE	REVISIONS	BY	DRAWN: AP	HEADWALL DETAIL	STANDARD DRAWING 2022
			DATE: 02/08		

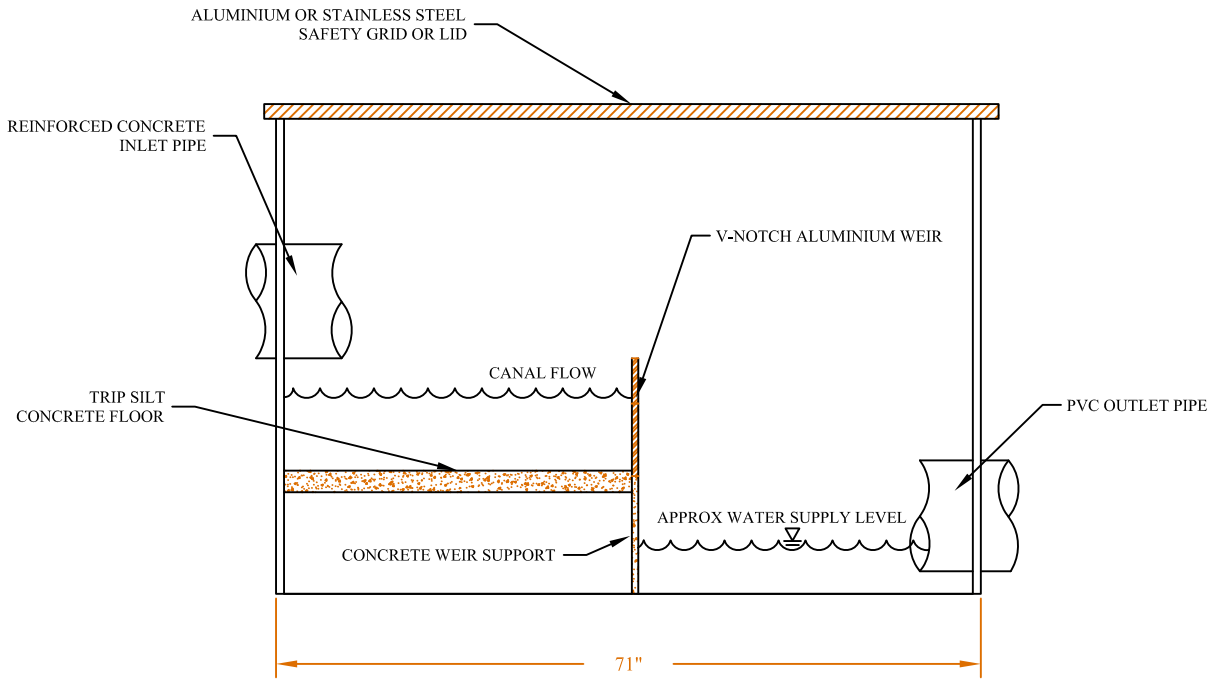

SIDE VIEW
NOT TO SCALE

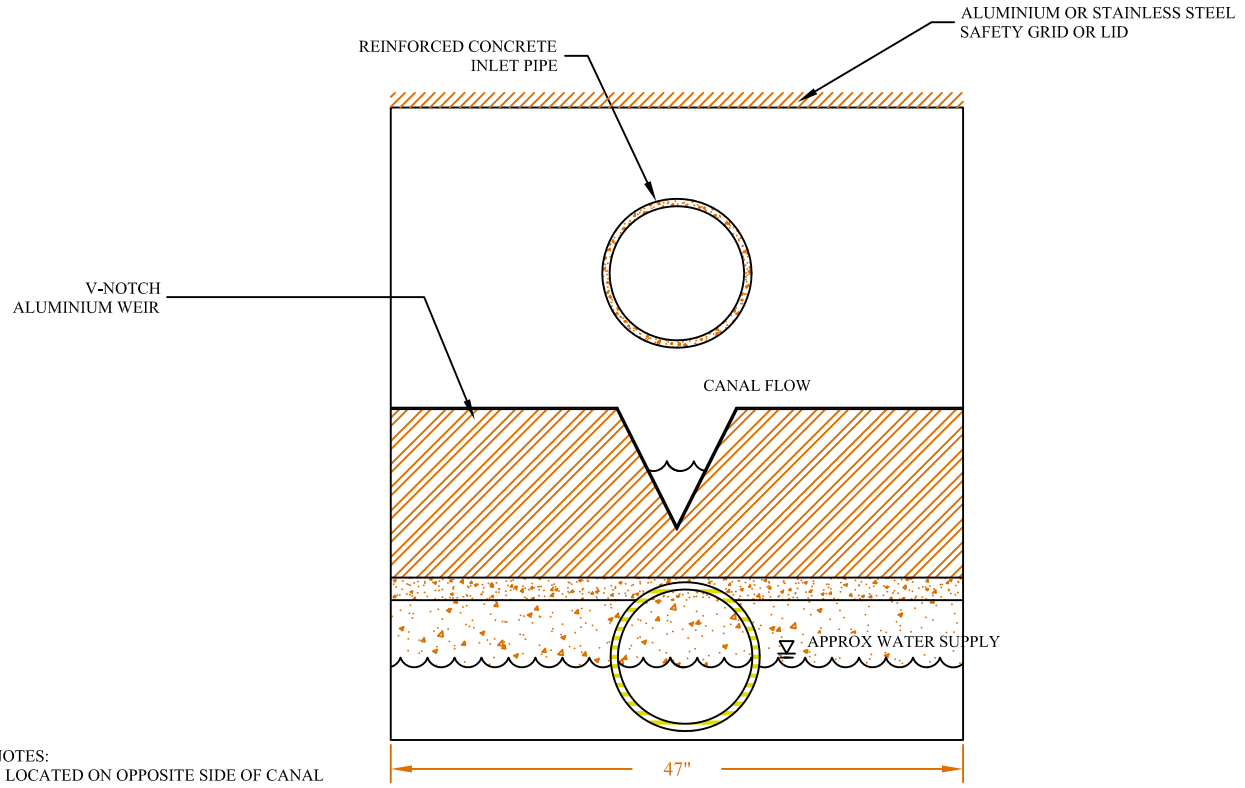

NOTES:
1. LOCATED ON OPPOSITE SIDE OF CANAL ROAD AS THE WEIR IS NOT ALLOWED IN BACKYARDS.

FRONT VIEW
NOT TO SCALE

SOUTH JORDAN
UTAH

SOUTH JORDAN CITY

DATE	REVISIONS	BY	DRAWN: AP DATE: 02/08	SILT TRAP BOX DETAIL	STANDARD DRAWING 2023

ITEM	DESCRIPTION	QTY	MATERIAL	CATALOG NUMBER
1	LOCKING LID	1	CAST GRAY IRON	LYL-4-IRR-T
2	BOX	1	CAST GRAY IRON	LYBB-4
3	BALL VALVE	2	CAST NO-LEAD BRASS	YBBV13-344W-NL
4	EXPANSION CONNECTION	1	CAST NO-LEAD BRASS	EC-4-NL
5	SPACER	1	COPPER	SPACER-4-DV-NL
6	ELL	2	CAST NO-LEAD BRASS	LA81-44-NL

C16171-001

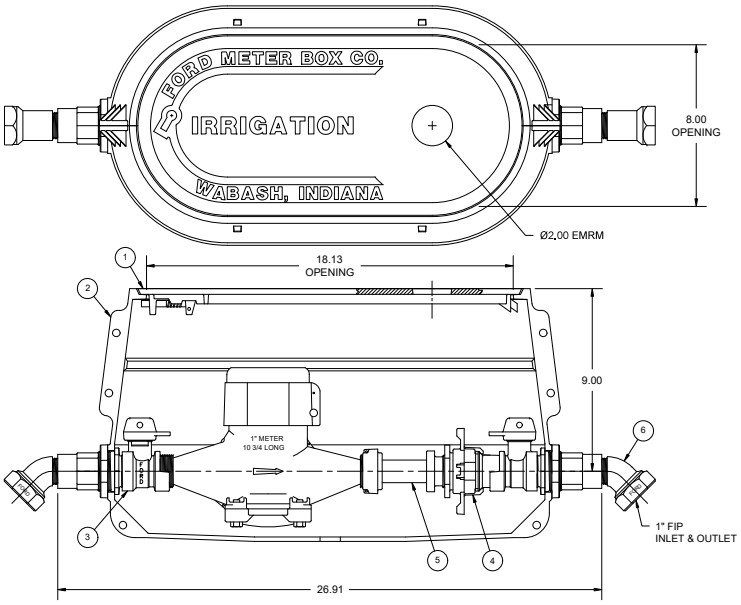

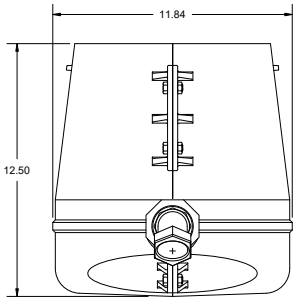

NOTES:

BRASS INLET AND OUTLET VALVES ARE ASSEMBLED TO THE BOX.
(EXPANSION CONNECTION AND SPACER ARE AWT, PACKED
IN A CARTON, AND SHIPPED INSIDE THE YOKEBOX.)

PROPOSAL
CIDS: 16171 #1
DATE: 10/15/19
INITIAL: RLR

REV.	DATE	CIDS	REVISION DESCRIPTION	DWN BY	APPV BY
0	10/11/2019	16171	PROPOSAL #1	KLP	RLR

LYLBB111-444-C16171-001-NL

ASSY, 1" LONG YOKEBOX, IRRIGATION, EMRM, 1" FIP ANGLED INLET & OUTLET, LESS CHECK VALVE

TOLERANCES: UNLESS OTHERWISE SPECIFIED
.X/X ± N/A
.XX ± N/A
.XXX ± N/A
∠ ± N/A

PATTERN:
CORE(S):
EST WEIGHT: ---- lb
SCALE: 1:4
SIZE: B
DRAWING NO. C16171-001

THE FORD METER BOX CO., INC.
Wabash, Indiana 46992 U.S.A.

IMPORTANT NOTICE
This drawing is part of information made available to one client, under obligation of confidence, as a proprietary design owned by The Ford Meter Box Company, Inc. (FMBCo). Any use of this information for any purpose other than that for which it was originally intended, or any disclosure to third parties without the express written consent of FMBCo, is prohibited. FMBCo does not warrant the accuracy or completeness of the information, nor does it assume any liability for its use in any other form or for any purpose other than that for which it was originally intended. The recipient agrees to indemnify FMBCo against any loss, expense or liability of any kind resulting from its use of the information. Reproduction of this drawing without FMBCo's written consent is prohibited. This drawing and all copies shall be returned to FMBCo on request.

PREPARED BY: _____

SOUTH JORDAN CITY

DATE	REVISIONS	BY

DRAWN:

DATE 3/19

SECONDARY METER BOX

STANDARD DRAWING 2024

STORM DRAIN

A-1180

SOUTH JORDAN
U T A H

Storm Drain Manhole Cover

(Platen-bottom cover)

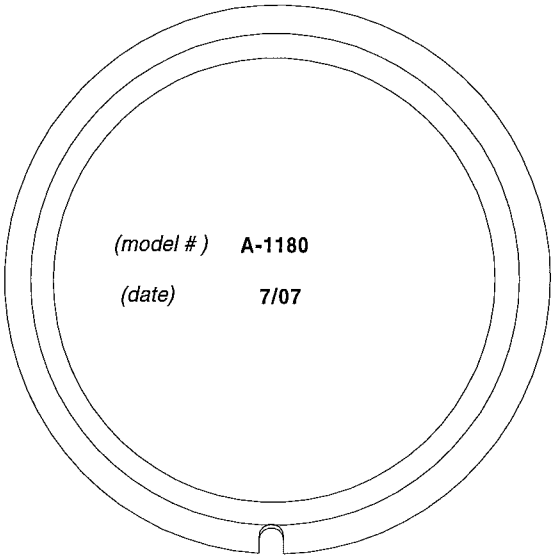

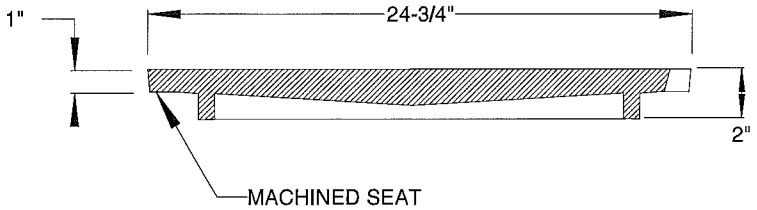

COVER EXCEEDS A COMPRESSION TEST OF UP TO 50,000 LBS.

CAST IRON conforms to ASTM A-48-93 Class 35B Meets H-20 Wheel Loading		**D&L model No. A-1180**	**D&L Foundry & Supply** CA Sales: (707) 557-4525 Fax: (707) 557-4655 UT Sales: (801) 785-5015 Fax: (801) 785-0835 WA Sales: (509) 765-7952 Fax: (509) 765-8124
Designation: A-1180	Date: July 2007	Prepared by: Jesse Walker D&L Foundry & Supply Inc. (not to scale)	

STORM DRAIN
SOUTH JORDAN
UTAH
Settled 1859

SIDE VIEW

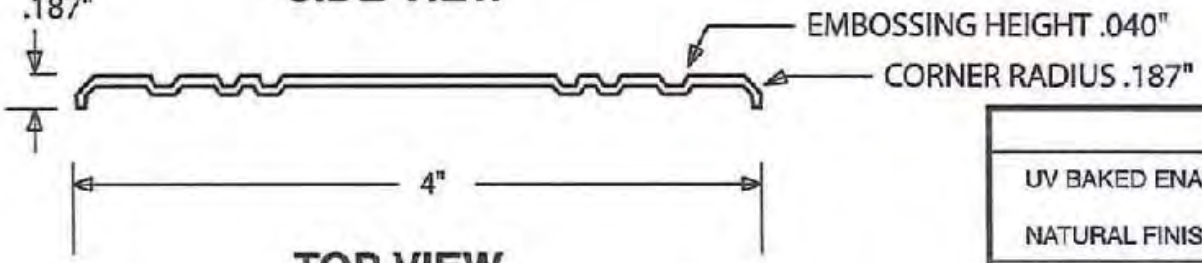

TOP VIEW

FINISH		
UV BAKED ENAMEL - 1-2 COLOR OPTION SAND BLASTED FRONT & REAR NATURAL FINISH FOR PAINT & ADHESIVE BONDING		
MATERIAL	**THICKNESS**	**WEIGHT**
304 ANNEALED STAINLESS STEEL	.062"	.218 LBS.
BRASS	.062"	.250 LBS.
ALUMINUM	.062"	.082 LBS.
ANODIZED ALUMINUM	.062"	.082 LBS.
LEGIBILITY WARRANTEE		
STAINLESS STEEL & BRASS -30 YEARS ALUMINUM & ANODIZED -15 YEARS		
U.S. & FOREIGN PATENTS PENDING		
OPTIONS		
SQUARE HOLE: 1/4" X 1/4" SERIAL NOS.: .250" HIGH, MAX. 6 DIGITS ENGRAVING COPY: 3 LINES, 30 CHARACTERS		

ART APPROVAL FORM

This is our interpretation of your artwork requirements. Review for accuracy and note any changes you wish to make before signing this approval form.
NOTE: This art approval request form is required to begin the manufacturing process.

Approved as is	Submit new art with changes	Date

PROPRIETARY AND CONFIDENTIAL
THE INFORMATION CONTAINED IN THIS DRAWING IS THE SOLE PROPERTY OF ALMETEK INDUSTRIES, INC., ANY REPRODUCTION IN PART OR AS A WHOLE WITHOUT THE WRITTEN PERMISSION OF ALMETEK INDUSTRIES, INC. IS PROHIBITED.

Customer: SOUTH JORDAN CITY
Job Name: STDM-9131-SSP
Date: AUGUST 29, 2007

SHEET 1 OF 1 SCALE 1:1

TOLERANCE
FRACTION ±1/8"
.XX ±.06"
.XXX ±.005"

ALMETEK
1-800-248-2080
Fax: 908-850-9618

Drawn by:	DATE	REV. # 2	DATE 11/16/07	REV. #	DATE	REV. #	DATE

Theft-Resistant Permanent Installations for Storm Drain Markers

30-Year Warranty*

For Stainless, Brass, Aluminum and Anodized Aluminum

WET CONCRETE INSTALLATION

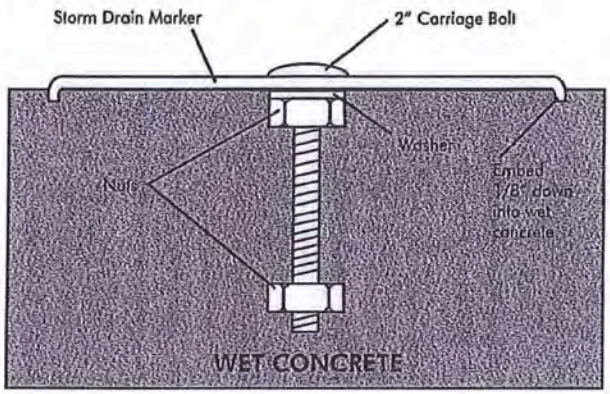

HARDWARE:

CB-2" Set:

- 1- 2" 1/4"-20 SS Carriage Bolt
- 1- 5/16"x5/8" O.D. x .062" thick SS Washer
- 2- 1/4"-20 UNC SS Nuts

BOLT-ON INSTALLATION

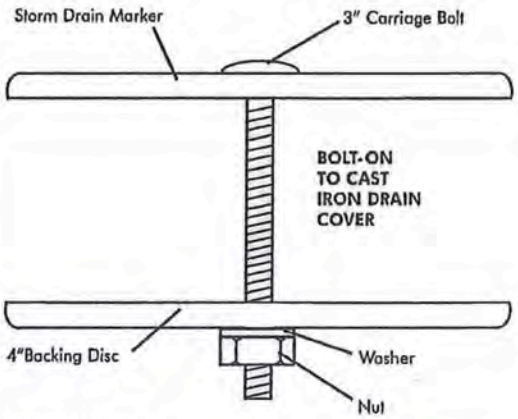

HARDWARE:

CB-3" Set:

- 1- 4" SS Backing Disc
- 1- 3" x 1/4"-20 SS Carriage Bolt
- 1- 5/16" x 5/8" O.D. x .062" thick SS Washer
- 1- 1/4"-20 UNC SS Nut

NOTE: All 4" Discs have square hole for carriage bolt insertion

* After the appropriate installation, if the Marker is stolen or missing, Almetek will replace the Marker and hardware at no cost.

SURFACE MOUNT INSTALLATION

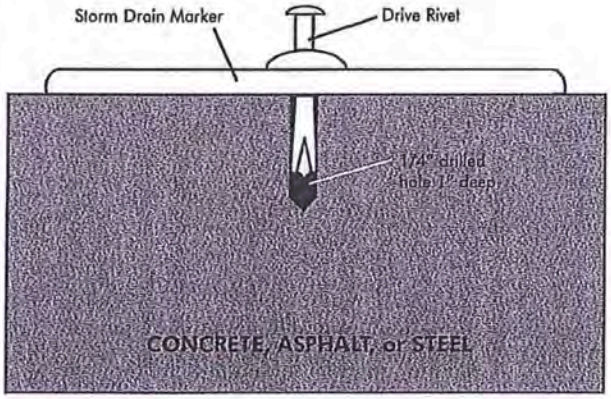

HARDWARE:

- 1-**DR250**-1/4" x 3/4" Drive Rivet-STDM
- 1-**DB250**-1/4" Carbide Drill Bit

Hammer (not supplied)

optional: adhesive

SUB-SURFACE MOUNT INSTALLATION

PATENT PENDING

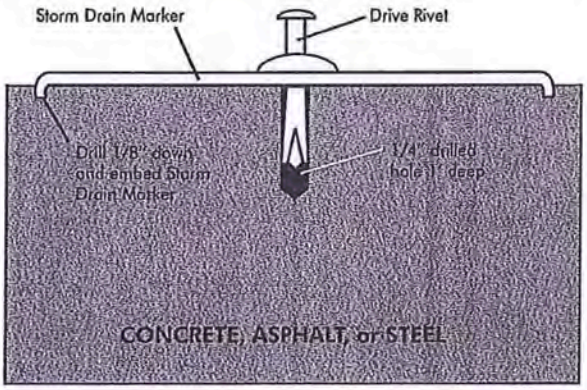

HARDWARE:

- 1-**DR250**-1/4" x 3/4" Drive Rivet- STDM
- 1-**CDB-4**-Carbide Drill Bit, Anchor, Pilot (not shown)

Hammer (not supplied)

optional: adhesive

Almetek Industries, Inc., 2 Joy Drive, Hackettstown, NJ 07840 • 908-850-9700 • Fax: 908-850-9618

www.almetek.com • email: csr@almetek.com

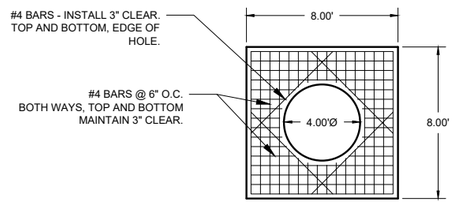

CONCRETE FOOTING

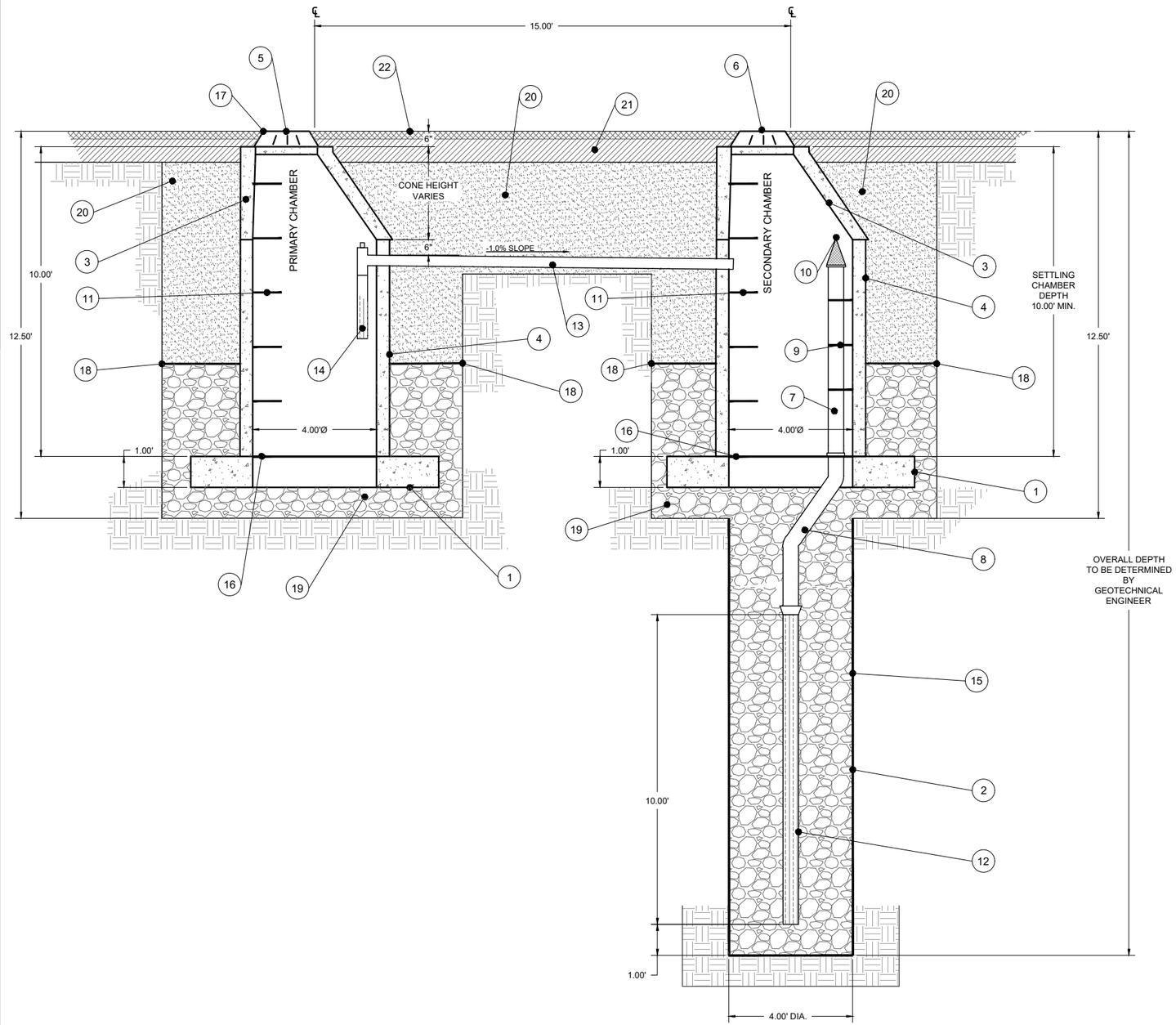

DRY WELL SYSTEM

KEYED NOTES

1. 8-FT X 8-FT X 1-FT REINFORCED CONCRETE FOOTING (SEE DETAIL)
2. MIN. 4' DRILLED SHAFT
3. MODIFIED FLAT-BOTTOM MANHOLE CONE
4. CONCRETE LINER, 4000 PSI 48" I.D. AND 54" O.D., CENTER IN HOLE WITH 2-FT X 2-FT OPENING IN BOTTOM FOR DRAINAGE
5. MIN. 30" DIA BOLTED CAST IRON RING AND GRATE
6. MIN. 30" DIA BOLTED CAST IRON RING AND SOLID SOUTH JORDAN CITY STORM DRAIN COVER
7. 6" DIA SCH 40 PVC OVERFLOW PIPE
8. 6" DIA DR-14 FUSED HDPE PIPE
9. SUPPORT BRACKET (TYP), FORMED 12 GA STEEL, FUSION BONDED EPOXY COATED
10. 6" DIA CONE SHAPED SCREEN
11. LADDER RUNGS
12. 6" DIA SLOTTED DR-14 FUSED HDPE PIPE
13. 4" DIA SCH 40 PVC CONNECTOR PIPE W/ VENTED ANTI-SIPHON INTAKE & FLOW REGULATOR, PIPE TO BE FULLY CAPPED UNTIL BASIN FULLY VEGETATED OR AS APPROVED BY CITY ENGINEER.
14. 4" DIA 1" LONG SLOTTED SCH 40 PVC INTAKE SCREEN
15. NON-WOVEN GEOTEXTILE FABRIC MIRFI 140 NL. OR APPROVED EQUALL. FABRIC TO BE DIAMETER OF HOLE, HELD APPROX 15' OFF THE BOTTOM OF EXCAVATION.
16. (2) LAYERS OF NON-WOVEN GEOTEXTILE FABRIC MIRAFI 140 NL. OR APPROVED EQUALL. PLACED AFTER OVERFLOW PIPE HAS BEEN INSTALLED
17. FABRIC SEAL, UV RESISTANT GEOTEXTILE. COVER GRATE UNTIL PAVING AND OR LANDSCAPING IS COMPLETE.
18. (2) LAYER OF FILTER FABRIC
19. 1" TO 1-1/2" WASHED ROCK
20. A1A TO A2.7 COMPACTED BACKFILL TO 96%
21. COMPACTED BASE MATERIAL
22. GRADED BASIN, CITY VAC TRUCK ACCESS TO BE PROVIDED AT A MIN HORIZONTAL DISTANCE OF 15' AND NO MORE THAN 8% INCLINE FROM EACH MANHOLE LID

NOTES

1. PRIMARY CHAMBER REQUIRED ON ALL DRY WELL SYSTEMS.
2. NO OUTSIDE PIPE CONNECTIONS TO PRIMARY OR SECONDARY CHAMBERS. ONLY SURFACE DRAINAGE IS ALLOWED
3. PERCOLATION TEST TO BE PERFORMED AFTER FINAL INSTALLATION OF DRY WELLS AND LANDSCAPING.

NO.	DATE	REVISION COMMENTS

SOUTHJORDAN CITY
1600 West Towne Center Dr. / South Jordan, UT 84095
Telephone: (801) 254-3742 / Web: WWW.SJC.UTAH.GOV

SOUTH JORDAN CITY
DRYWELL SYSTEM DETAIL
AND SPECIFICATIONS

Project No: ____ Drawn By: JWH Designed By: JWH
File Name: ____ Checked By: ____ Date: 1/7/16

4010
Sheet No.

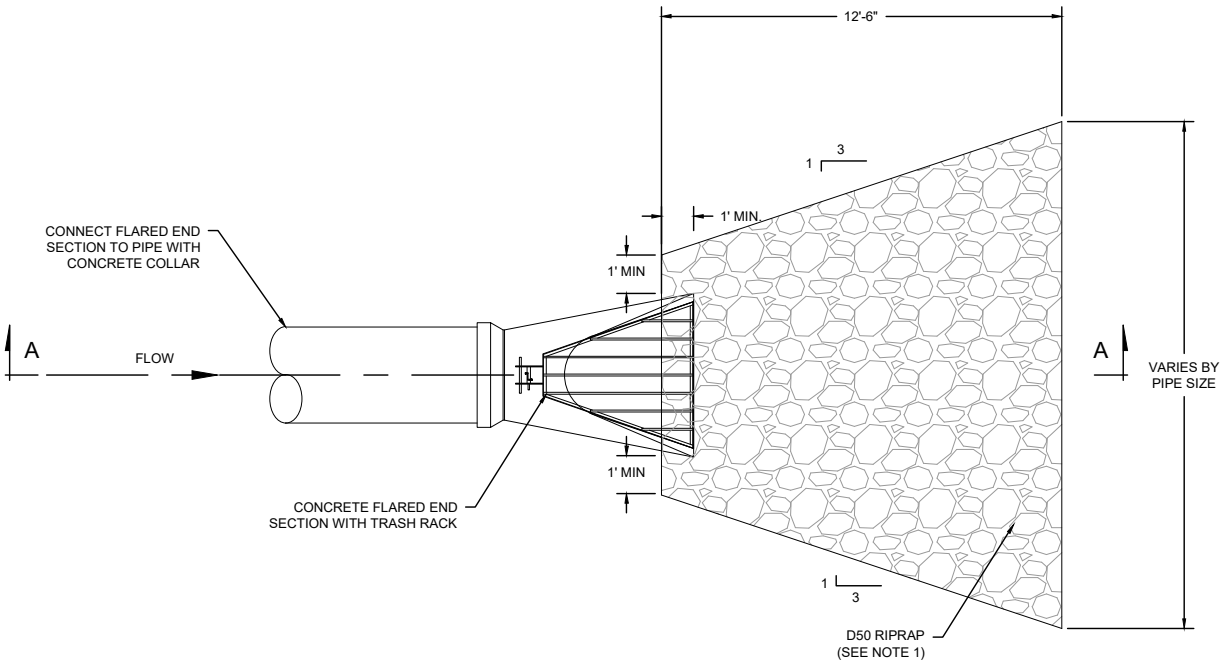

PLAN

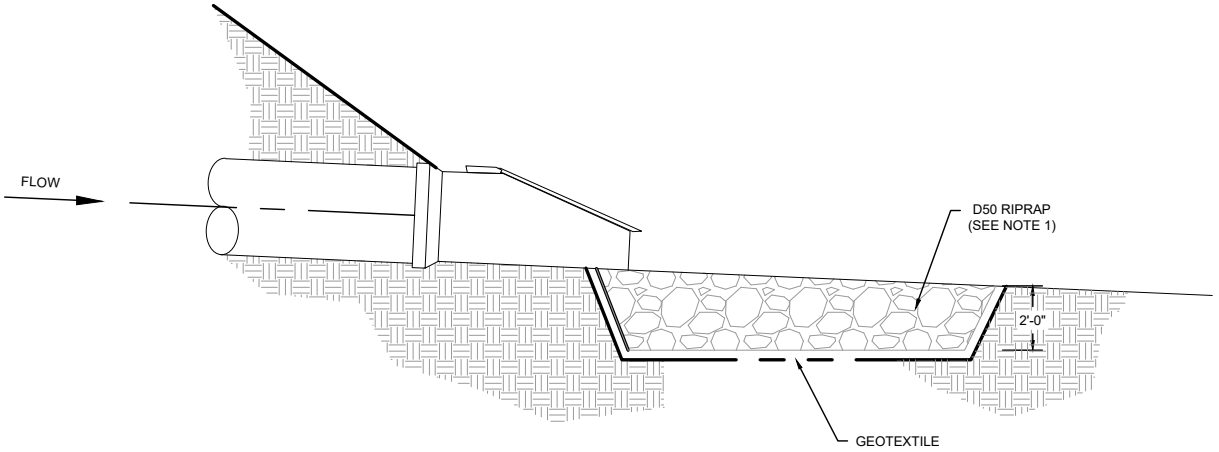

SECTION A

NOTES

1. RIPRAP TO BE 12-IN MIN FOR 18-IN PIPE AND 24-IN AND LARGER PIPE TO REQUIRE 18-IN MIN RIPRAP

PREPARED BY: _____

SOUTH JORDAN UTAH

SOUTH JORDAN CITY

DATE	REVISIONS	BY	DRAWN: JWH	RIPRAP APRON DETAIL	STANDARD DRAWING 4015
			DATE 2/21		

STREETS

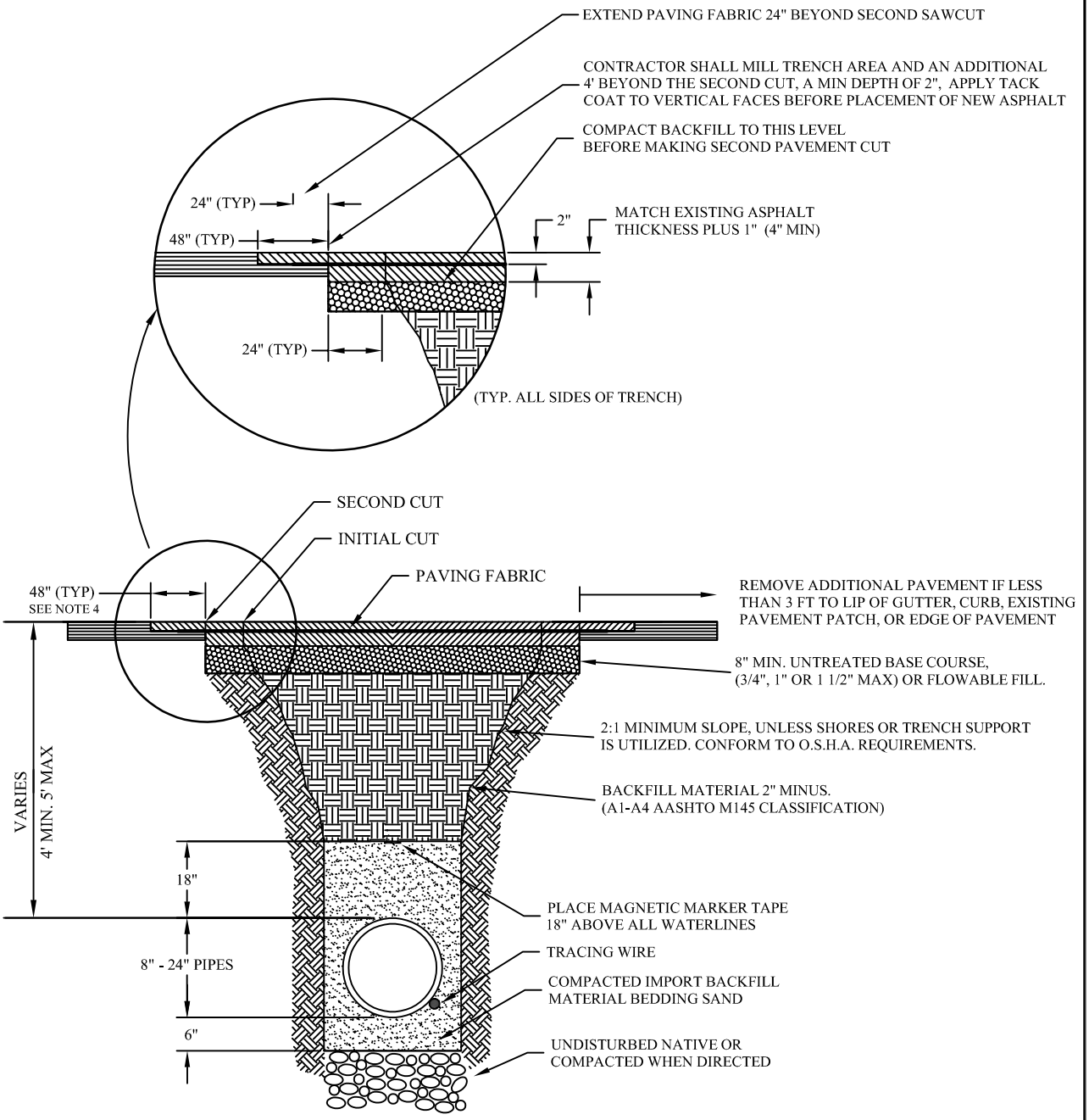

NOTES:
1. NO SAW CUTS TO END UP IN THE WHEEL PATH
2. AFTER THE SECOND CUT, PATCH TRENCH UP TO THE EXISTING ROAD SURFACE THEN MILL THE TRENCH AREA AND AN ADDITIONAL 4 FT BEYOND THE SECOND CUT OR AS DIRECT BY THE CITY ENGINEER ACCORDING TO CITY STANDARDS.
3. PAVING FABRIC PER APWA STANDARD ROADWAY PAVEMENT GEOTEXTILE, NON-WOVEN
4. IF THE OCI RATING OF THE ROAD IS BETWEEN 80 AND 100, THE 48" WILL BE INCREASED TO FULL WIDTH OF ROAD, OR AS DETERMINED BY THE CITY ENGINEER OR DESIGNEE.

PREPARED BY:_____

SOUTH JORDAN UTAH

SOUTH JORDAN CITY

DATE	REVISIONS	BY	DRAWN:	TRENCH CROSS SECTION TERMINOLOGY & STANDARD SIZES	STANDARD DRAWING
04/11		JRF	KS		3010
			DATE 1/06		

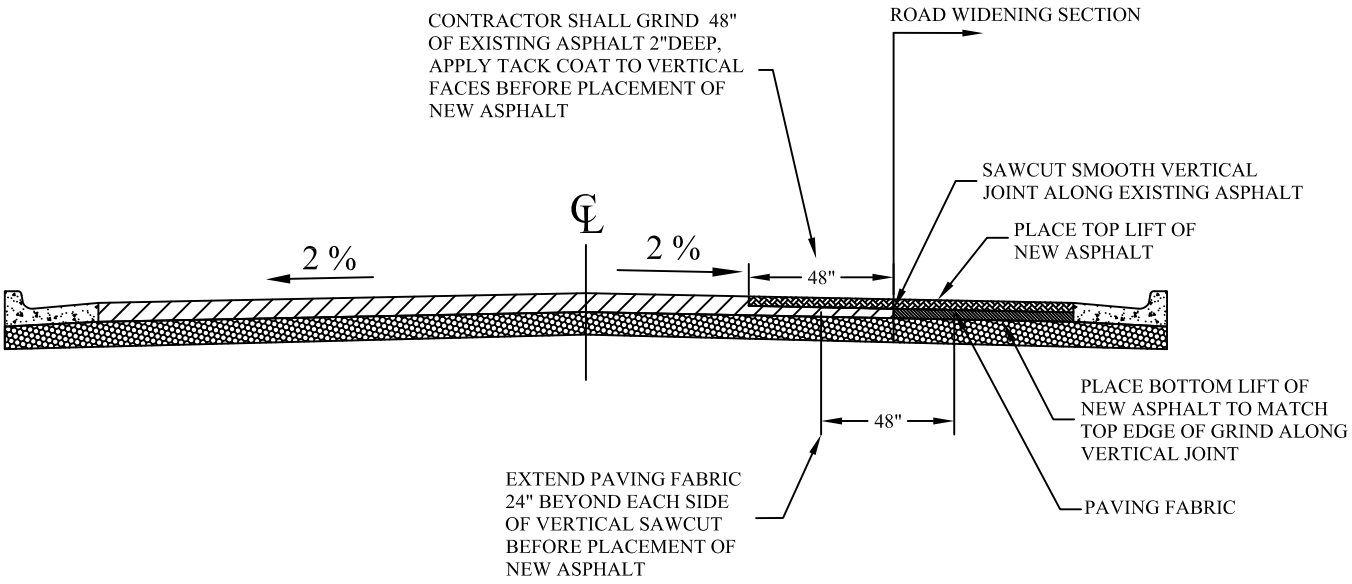

NOTE: PER CITY STREET REPAIR / REPAVING POLICY, IF CONSTRUCTION PLANS DO NOT REQUIRE REMOVAL OF EXISTING ROADWAY TO CENTERLINE CONTRACTOR SHALL JOIN NEW PAVEMENT PER THIS STANDARD

PREPARED BY: _____

SOUTH JORDAN UTAH

SOUTH JORDAN CITY

DATE	REVISIONS	BY	DRAWN: KS	ROAD WIDENING	STANDARD DRAWING
			DATE 1/06		3012

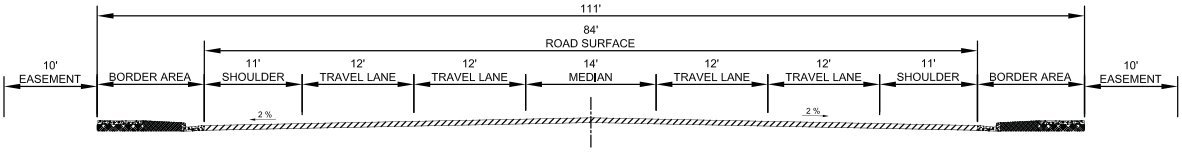

111-FOOT R.O.W. ARTERIAL
84' OF ROAD SURFACE

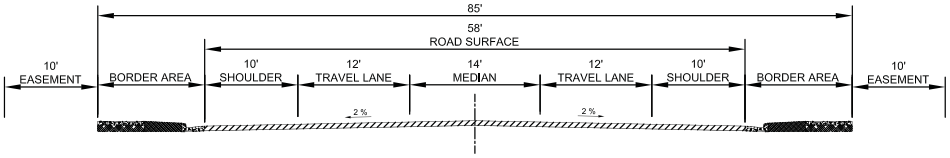

85-FOOT R.O.W. MAJOR COLLECTOR
58' OF ROAD SURFACE

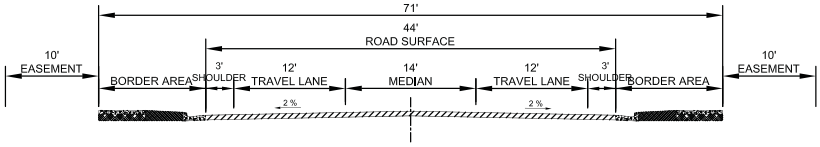

71-FOOT R.O.W. MINOR COLLECTOR
44' OF ROAD SURFACE

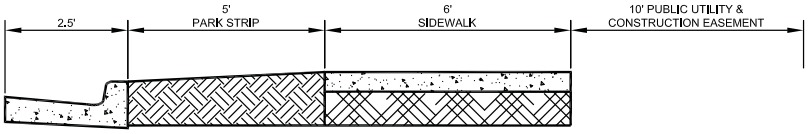

COLLECTOR BORDER AREA

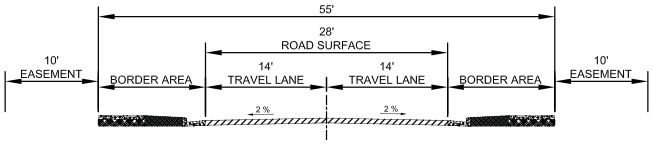

55-FOOT R.O.W. RESIDENTIAL
28' OF ROAD SURFACE

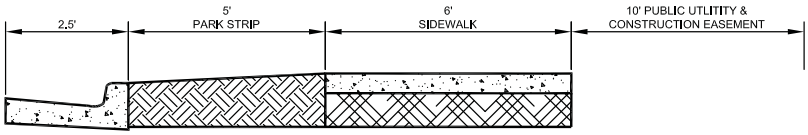

RESIDENTIAL BORDER AREA

Sheet No. 1 / 1

Project No. _____
Drawn by: TB Design by: MS
File Name: roadsections
Checked by: _____ Date: 1/8/00

Road Widths and Border Areas

SOUTH JORDAN UTAH
1175 South Redwood Road / South Jordan, UT 84095
Telephone: (801) 254-3742 / Fax: (801) 254-3393

NO.	DATE	REVISION COMMENTS

EXHIBIT A

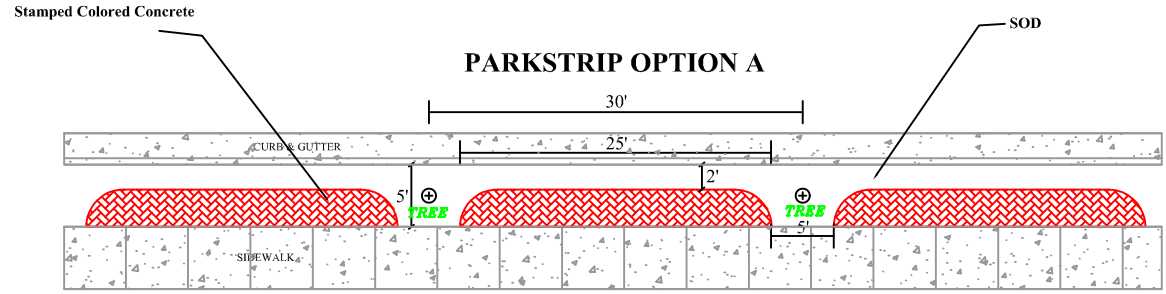

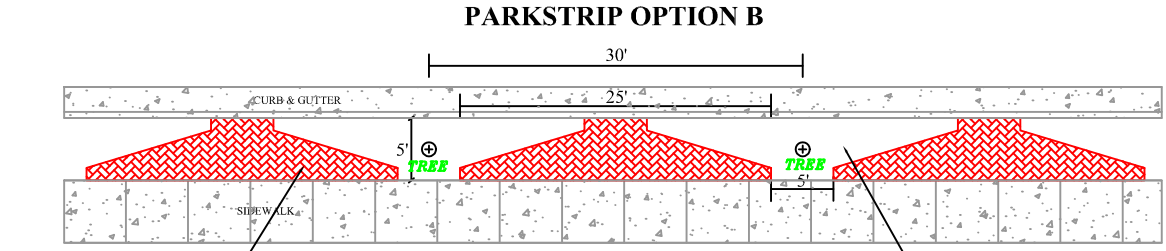

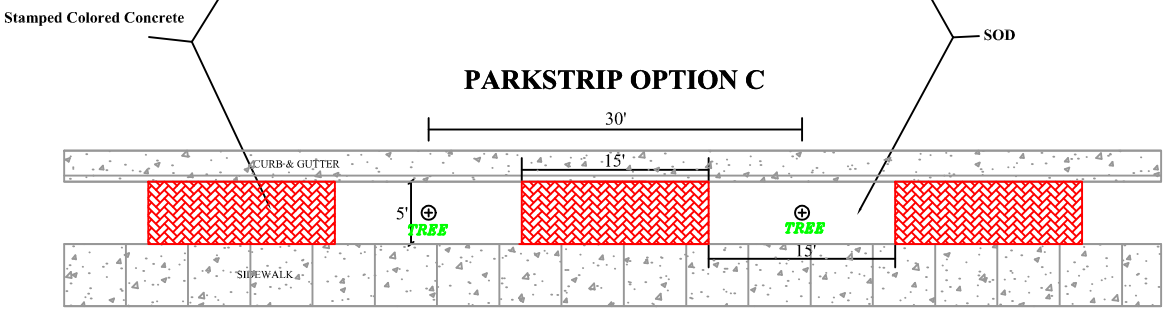

NOTE: ALL PLANTED AREAS MUST BE EQUIPPED WITH AN IRRIGATION SYSTEM.

DETAIL FOR ALL TREES, SOD, IRRIGATION SYSTEM AND CONCRETE TO BE SUBMITTED FOR REVIEW AND APPROVED BY THE CITY PRIOR TO INSTALLATION. STAMPED CONCRETE WILL BE COLORED DARK RED OR GREY AND SEALED.

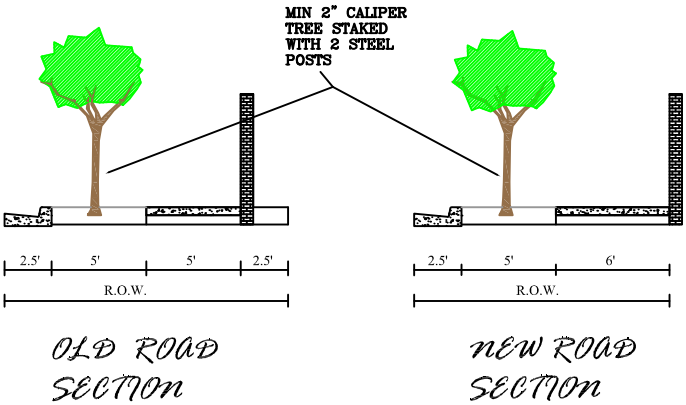

Sheet No. 1 / 1

Project No.
Drawn by: CC Design by: CL
File Name: PROPOSEDPARKSTRIPS
Checked by: Date: 10/17/02

SINGLE FAMILY REAR AND SIDE PARKSTRIPS ON COLLECTOR STREETS

SOUTH JORDAN UTAH
10996 South Redwood Road / South Jordan, UT 84095
Telephone: (801) 253-5230 / Fax: (801) 253-0617

NO.	DATE	REVISION COMMENTS

South Jordan City Sign Post, Sign Hardware Standard Drawing

For minimum sign dimensions and letter heights refer to section 7.7.C. of the South Jordan City Construction Standards and Specifications

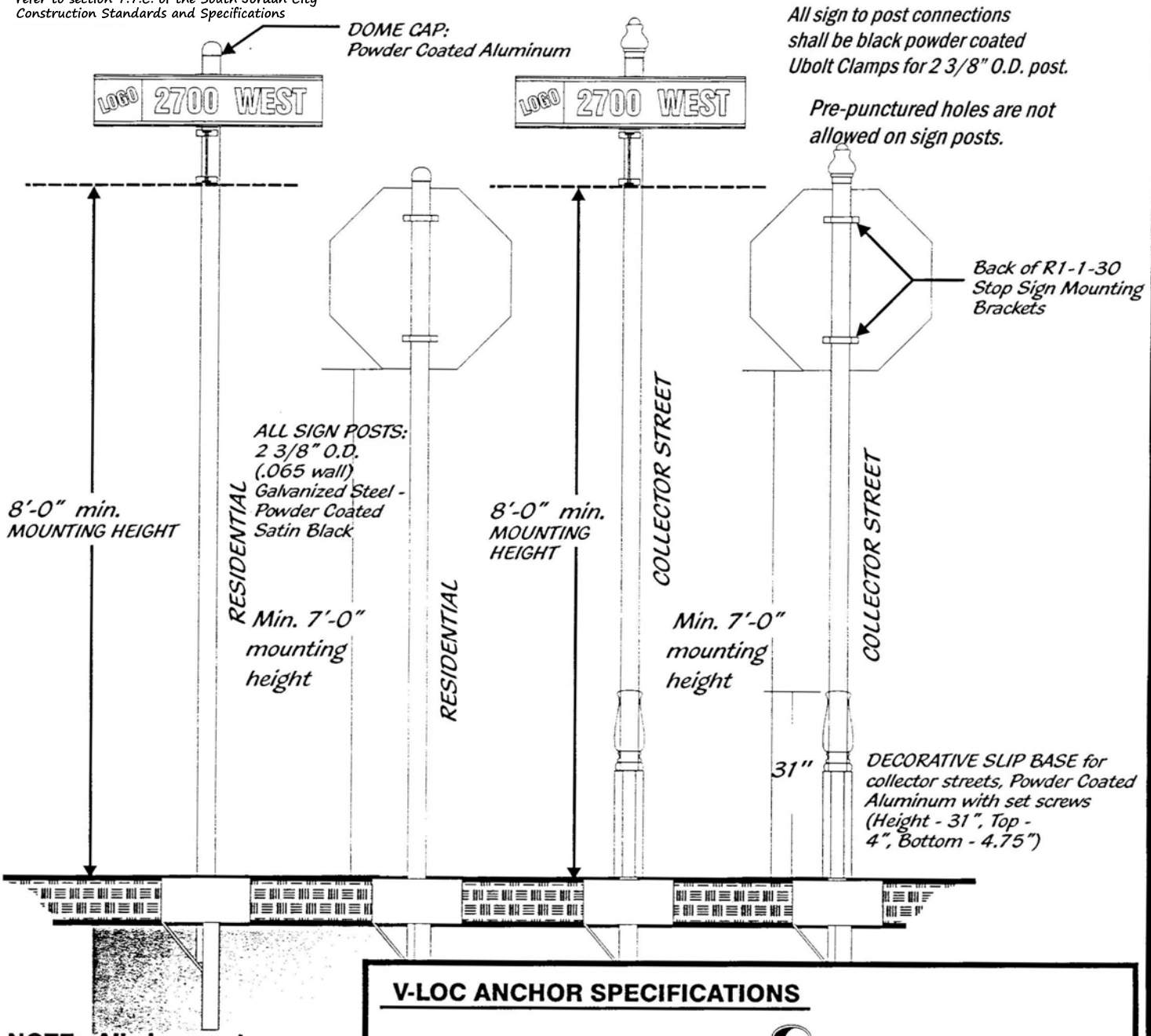

NOTE: All sign post material shall meet the following: Post material ASTM-A653, G90, HSLAS, Type B, 55,000 min Y.S. and 70,000 T. S. , approved by F.H.W.A. and ASHTO under current NCHRP Report #350.

Post, cap and decorative base to be powder coated satin black.

V-LOC ANCHOR SPECIFICATIONS

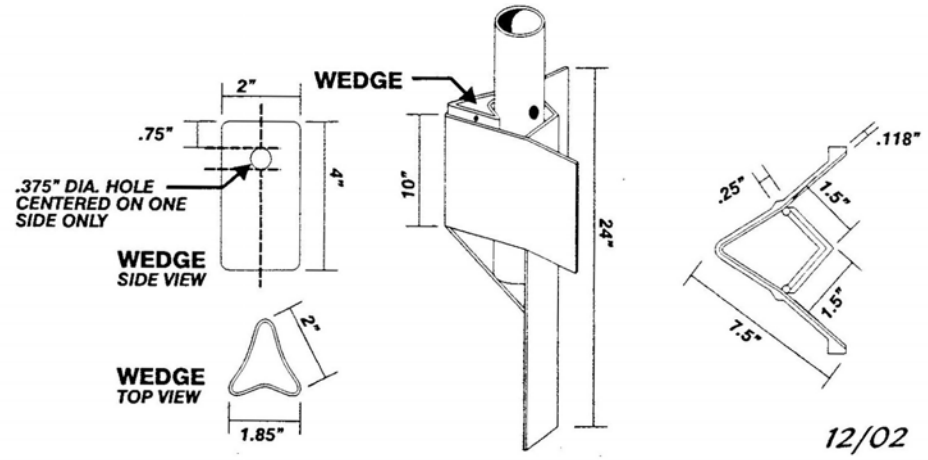

12/02

SLIPBASE DETAIL FOR RAISED ISLAND

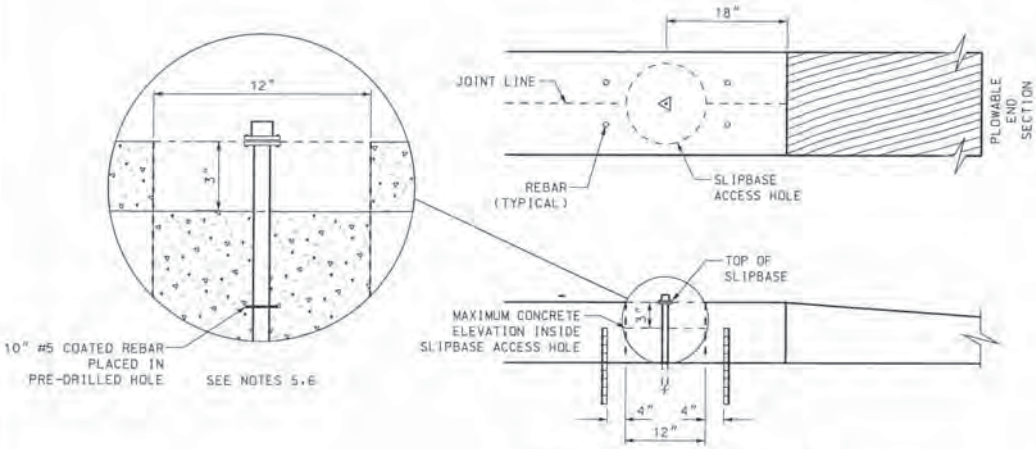

SLIPBASE DETAIL FOR SIDEWALK

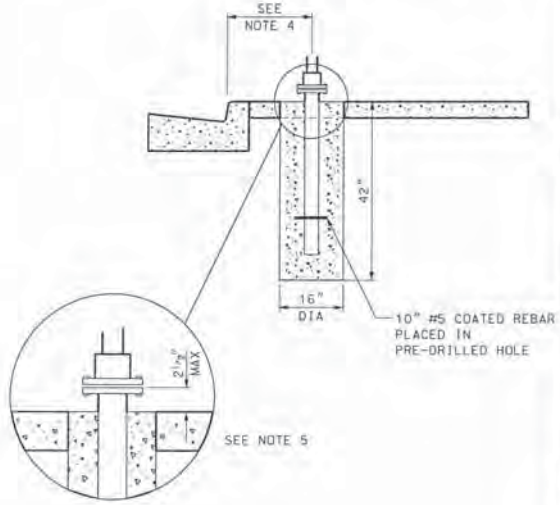

SLIPBASE GROUND STUB FOUNDATION DETAIL

APPLIES TO SINGLE AND DOUBLE POST APPLICATIONS

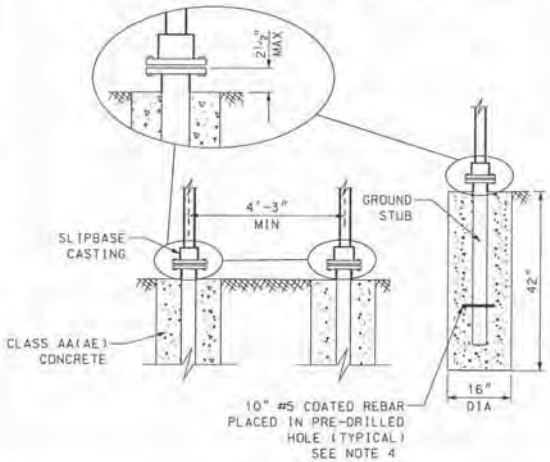

POST SELECTION GUIDE SINGLE POST APPLICATION

SIGN HEIGHT (FT)	SIGN WIDTH (FT) 2	2.5	3	4	5
1				P3	P3
2				P3	P3
2.5				P3	P3
3				P4	P4
4			P3	P4	P4	P5
5		P3	P3	P4	P4	P5
6		P3	P3	P4	P5	P5
7		P3	P3	P4	P5	

"T" OR "U" BRACKET RECOMMENDED FOR SIGNS GREATER THAN 4 FEET WIDE

POST SELECTION GUIDE DOUBLE POST APPLICATION

SIGN HEIGHT (FT)	SIGN WIDTH (FT) 5	6	7	8	9	10
4		P4	P4	P4	P5	P5
5		P4	P5	P5	P5	P5
6		P4	P5	P5	P5	P5
7	P4	P5	P5	P5	P5	
8	P5	P5	P5	P5		

NOTES:

1. REFER TO STD DWG SN 10A FOR POST REQUIREMENTS.
2. REFER TO STD DWG SN 13 SERIES FOR MOUNTING AND HARDWARE REQUIREMENTS.
3. WHEN INSTALLING A SUPPLEMENTAL SIGN DO NOT EXCEED MAXIMUM SQUARE FOOTAGE OF SINGLE POST APPLICATION BY MORE THAN 25%. (EX: POST P5 MAX. SIGN SIZE 5'W x 6'H= 30 SQ.FT.+ 25%=37½ SQ.FT.=(5'Wx6'H)+(3'Wx2.5'H)=37½).
4. REFER STD DWG SN 7A FOR HEIGHT AND OFFSET REQUIREMENTS.
5. CORE DRILL SLIPBASE HOLE. INSTALL AFTER PLACEMENT OF FINISHED GRADE OF CONCRETE OR ASPHALT.
6. ISLAND INSTALLATION: PLACE TOP OF SLIPBASE STUB FLUSH WITH TOP OF THE ISLAND, WITH A TOLERANCE OF ± ⅛" (DO NOT PLACE BELOW TOP OF CURB).

NO.	DATE	APPR.	REVISIONS	REMARKS

UTAH DEPARTMENT OF TRANSPORTATION
STANDARD DRAWINGS FOR ROAD AND BRIDGE CONSTRUCTION

RECOMMENDED FOR APPROVAL — JAN.01.2008 DATE
CHAIRMAN STANDARDS COMMITTEE
APPROVED — JAN.01.2008 DATE
DEPUTY DIRECTOR

STANDARD DRAWING TITLE
SLIPBASE
SIGN BASE (B3)
INSTALLATION

STD DWG
SN 10B

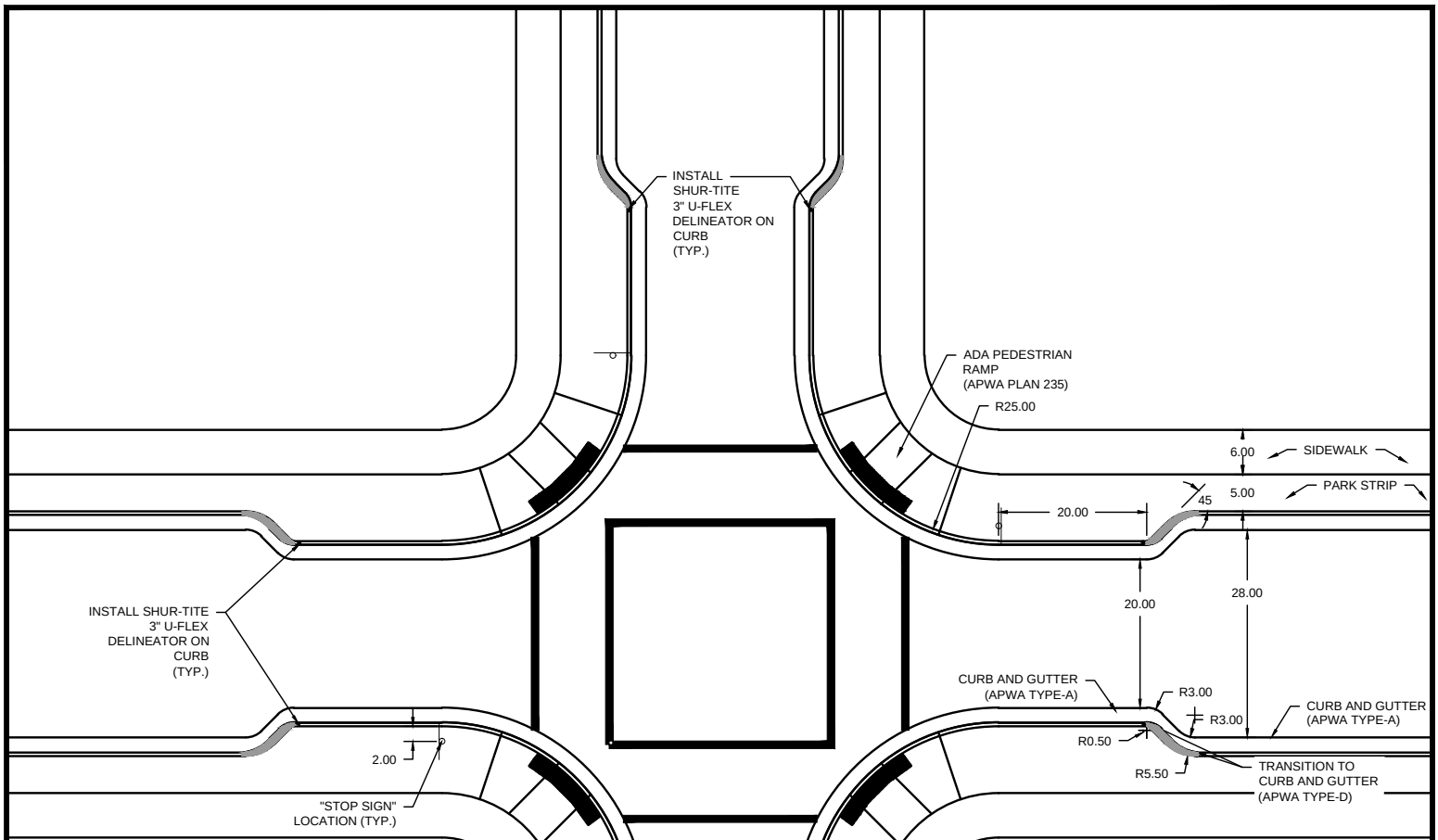

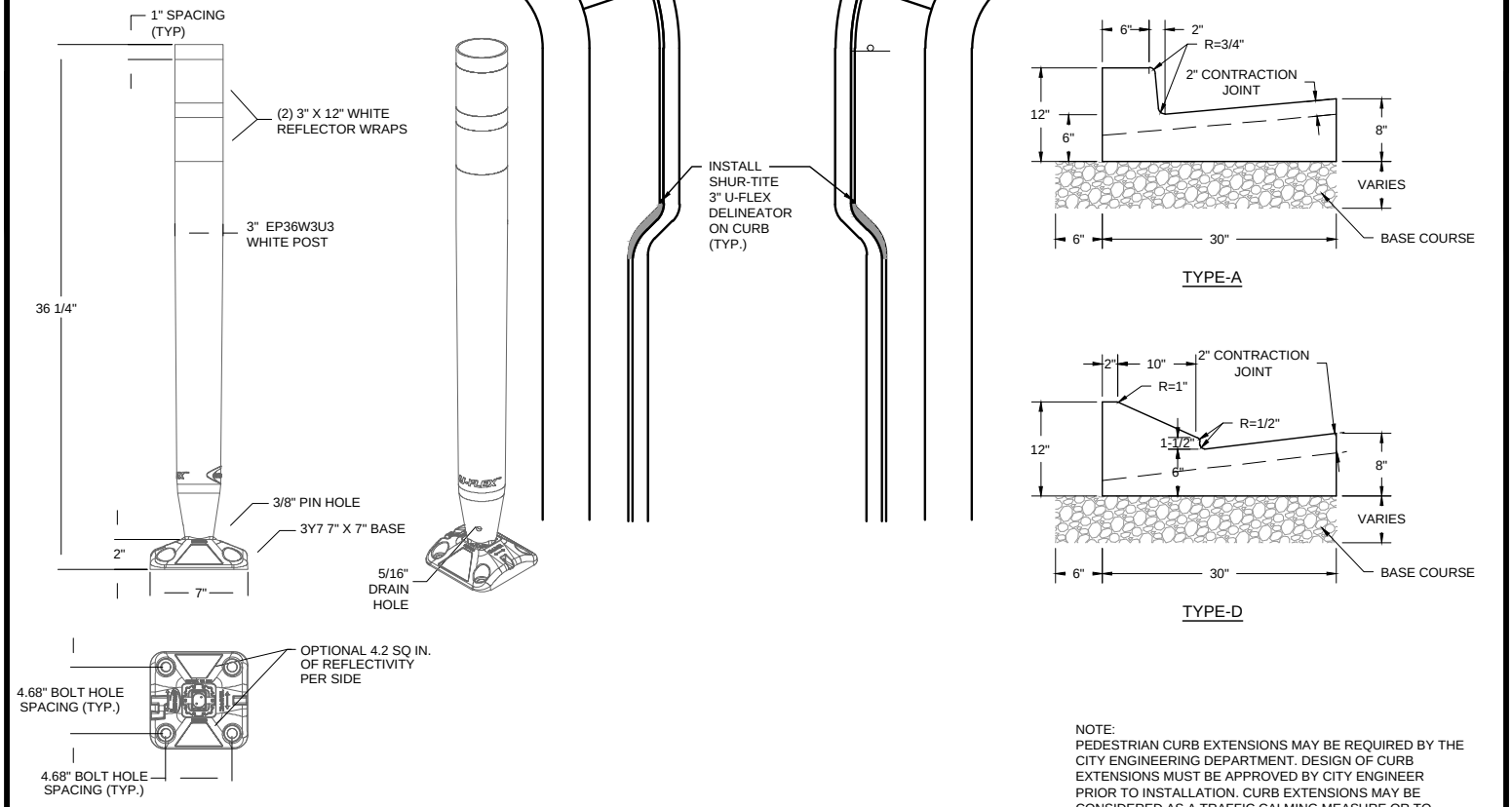

NOTE:
PEDESTRIAN CURB EXTENSIONS MAY BE REQUIRED BY THE CITY ENGINEERING DEPARTMENT. DESIGN OF CURB EXTENSIONS MUST BE APPROVED BY CITY ENGINEER PRIOR TO INSTALLATION. CURB EXTENSIONS MAY BE CONSIDERED AS A TRAFFIC CALMING MEASURE OR TO ENHANCE THE SAFETY OF PEDESTRIAN CROSSINGS.

SOUTH JORDAN
UTAH
1600 West Towne Center Dr. / South Jordan, UT 84095
Telephone: (801) 254-3742 / Fax: (801) 253-5235

Project No.

Drawn by: JWH Design by: JWH

File Name:

Checked by: JN Date: 1/8/20

SOUTH JORDAN CITY
CURB EXTENSION- TYPICAL DETAIL

DT-01

Sheet No.

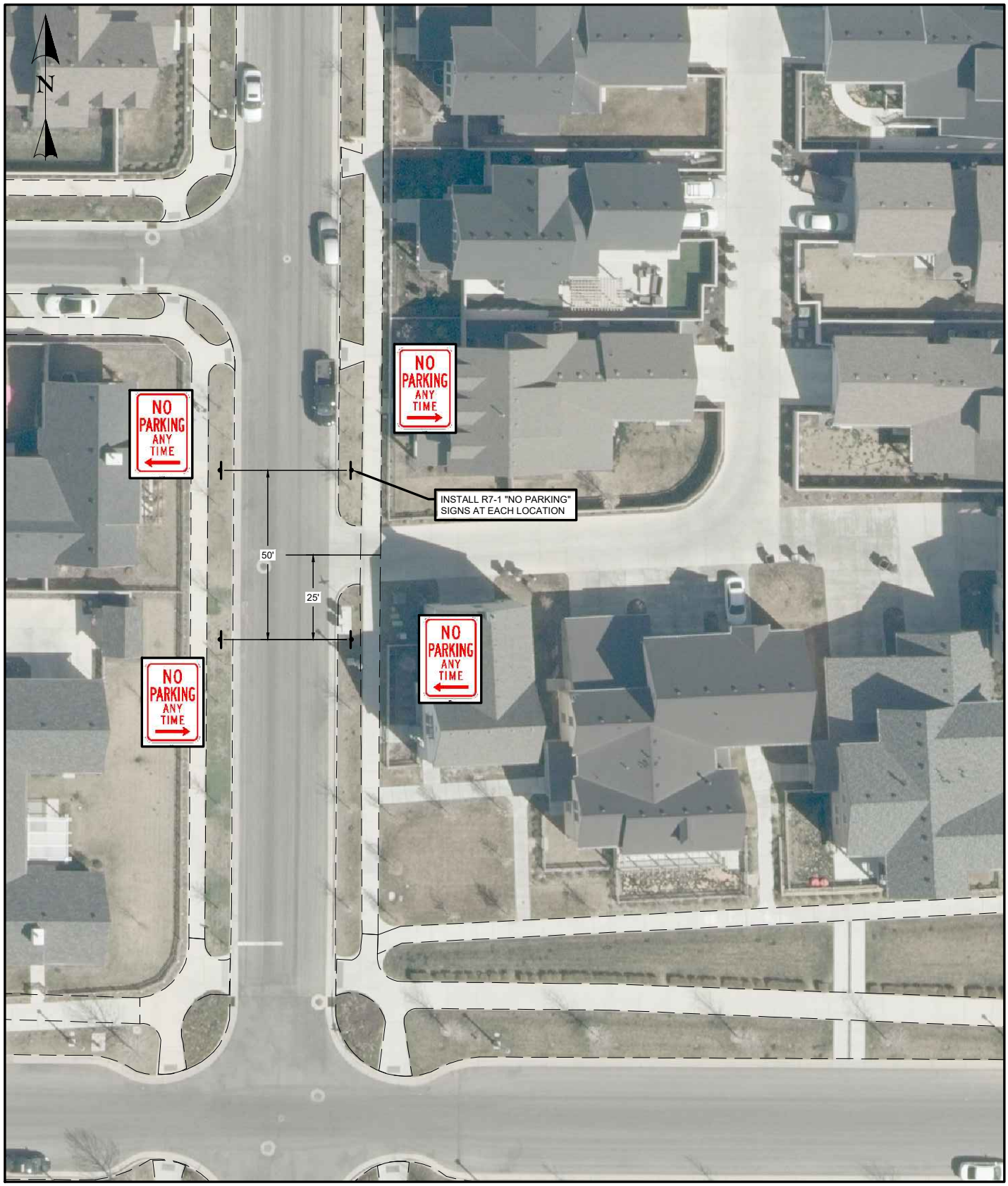

Applicable at the entrance to dead end alleyways and lanes, that form a T intersection.

SOUTH JORDAN
UTAH
1600 West Towne Center Dr. / South Jordan, UT 84095
Telephone: (801) 254-3742 / Fax: (801) 253-5235

Project No. _____
Drawn by: _____ Design by: _____
File Name: _____
Checked by: _____ Date: _____

Signage for Garbage Routes - No Parking Areas -

STANDARD DRAWING

3020

Sheet No.

STREET LIGHTS

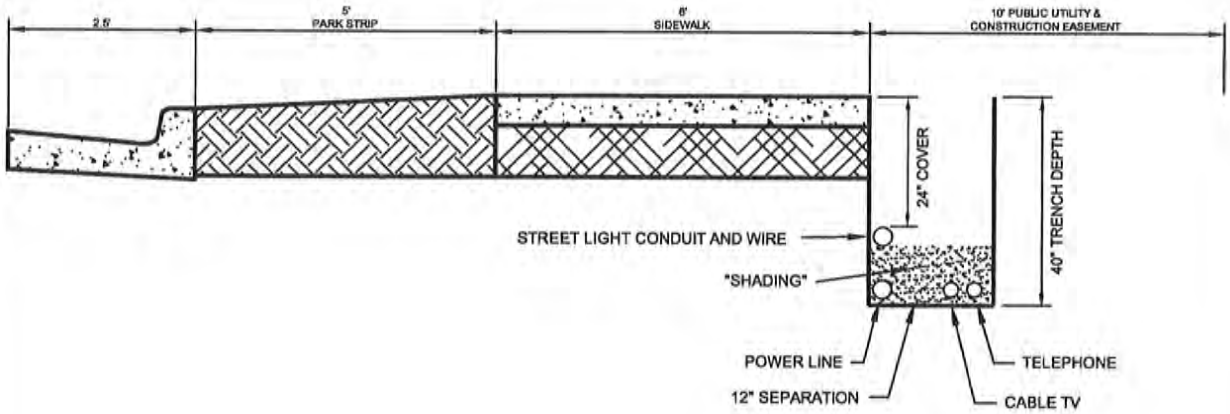

UTILITY TRENCH DETAIL

Not to Scale

Sheet No. 1 / 1	Project No. ____ Drawn by: SG Design by: ____ File Name: Utility Trench Detail Checked by: ____ Date: 3/02/07	Standard Utility Trench Detail	SOUTH JORDAN		NO. / DATE / REVISION COMMENTS

MADE
IN USA
SOUTH JORDAN
Electric
LIFT
HERE

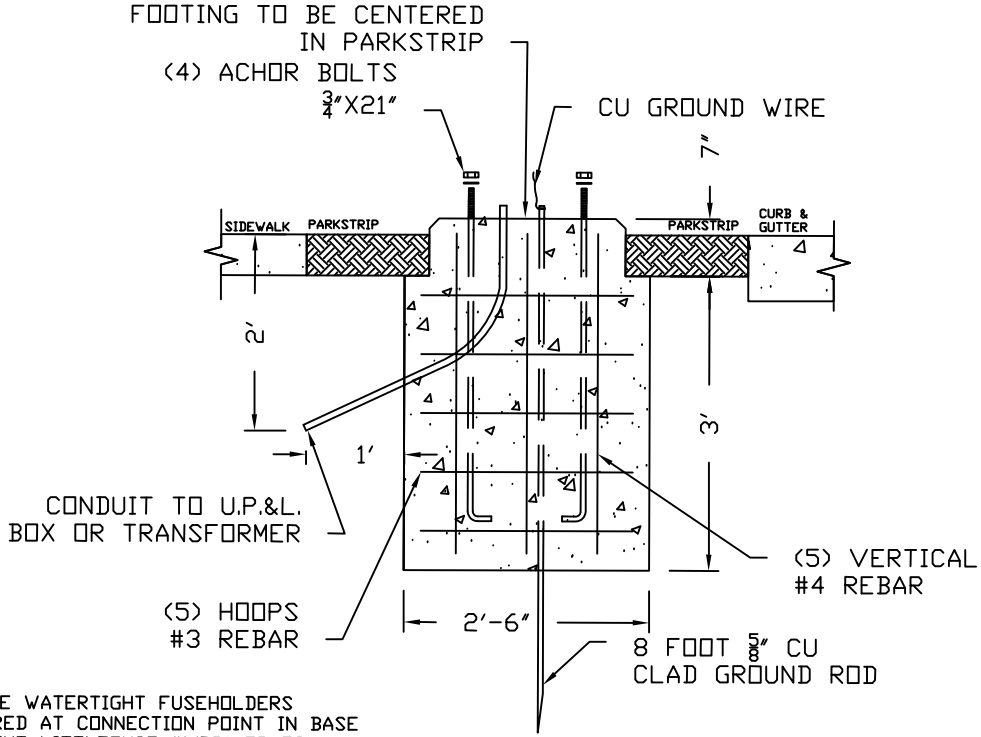

NOTE:
IN-LINE WATERTIGHT FUSEHOLDERS
REQUIRED AT CONNECTION POINT IN BASE
OF LIGHT LITTLEFUSE #WPB1 OR EQUAL.

LIGHT PEDESTAL DETAIL

SCALE: N.T.S.

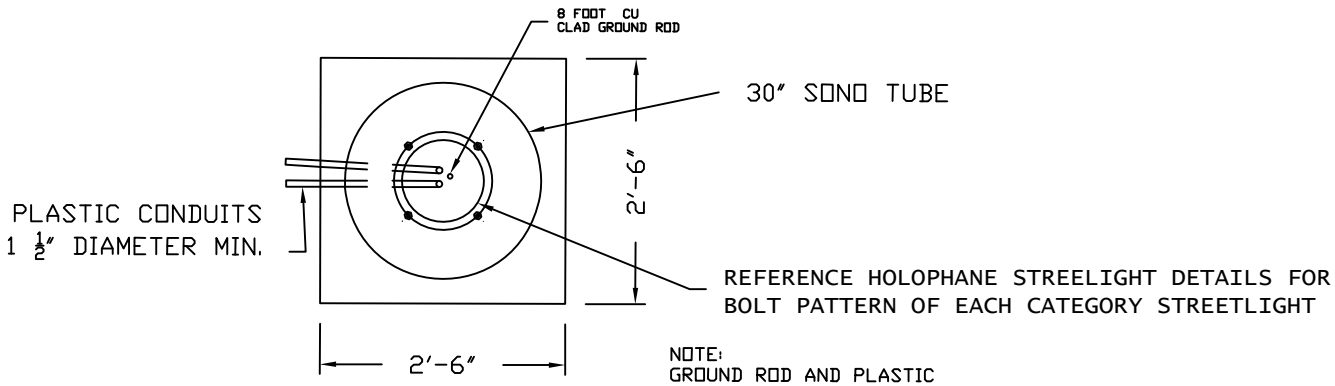

PLAN VIEW

SCALE: N.T.S.

NOTE:
GROUND ROD AND PLASTIC
CONDUITS MUST BE LOCATED
WITHIN A 3" RADIUS FROM THE
CENTER OF BOLT CIRCLE.

NO.	DATE	REVISION COMMENTS

SOUTH JORDAN
UTAH
1175 South Redwood Road | South Jordan, UT 84095
Telephone: (801) 254-3742 | Fax: (801) 254-3393

Streetlight Pedestal
Category 1, 2, 3 & 4

Project No. ____
Drawn by: CR
Design by: CR
File Name: ____
Checked by: ____
Date: ____

1/1
Sheet No.

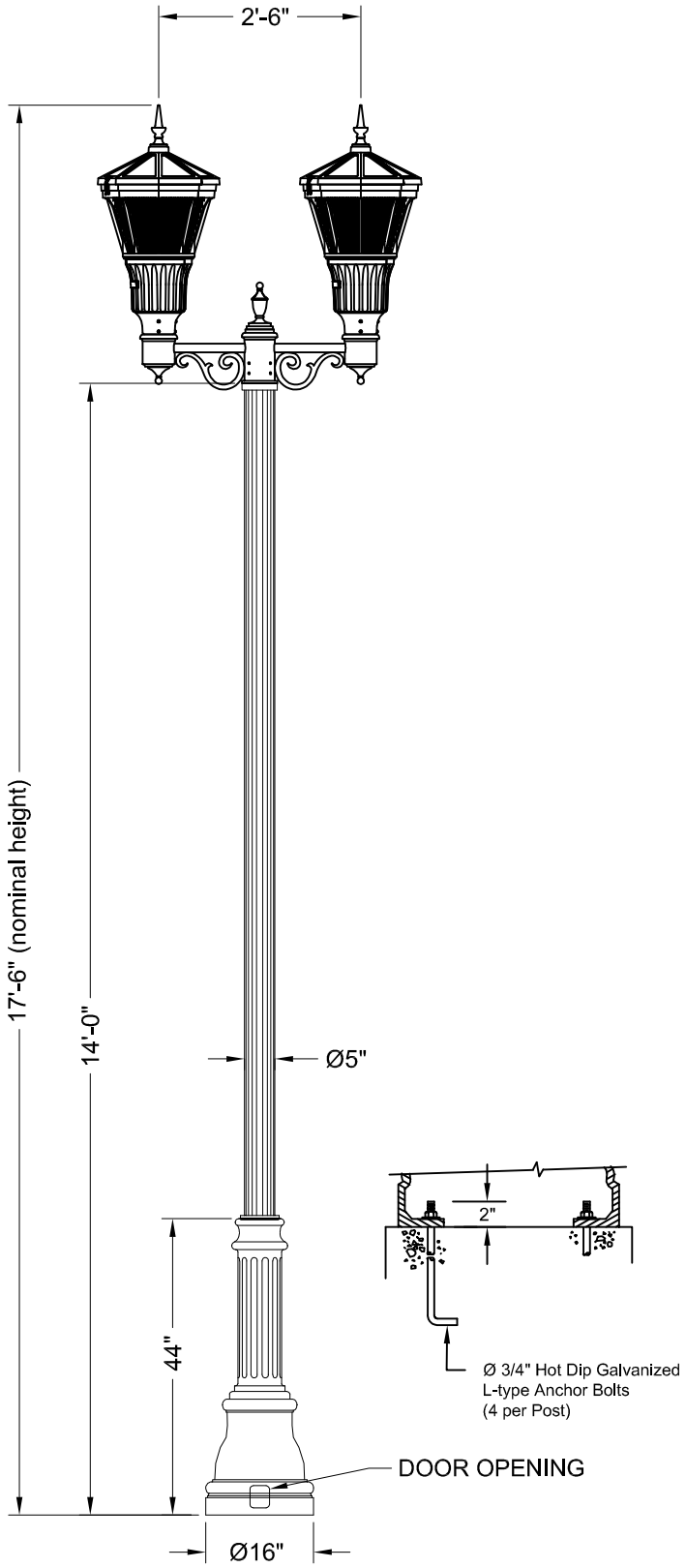

Specifications

POST DESCRIPTION
The lighting post shall be aluminum, one-piece construction, with a classic fluted base design. The shaft shall be Ø5" fluted.

MATERIALS
The base shall be heavy wall, cast aluminun produced from certified ASTM 356.1 ingot per ASTM B-179-95a or ASTM B26-95. The straight shafts shall be extruded from aluminum, ASTM 6061 alloy, heat treated to a T6 temper. All hardware shall be tamper resistant stainless steel. Anchor bolts to be hot dip galvanized.

CONTSTRUCTION
The shaft shall be double welded to the base casting and shipped as one piece for maximum structural integrity. The shaft shall be circumferentially welded inside the base casting at the top of the access door, and externally where the shaft exits the base. All exposed welds below 8' shall be ground smooth. All welding shall be per ANSI?AWS D1.2-90. All welders shall be certified per Section 5 of ANSI/AWS D1.2-90.

DIMENSIONS
The post shall be 14'-0" in height with an 16" diameter base. The shaft diameter shall be 5". At the top of the post, a tenon with a transitional donut shall be provided for arm mounting.

INSTALLATION
The post shall use four L-type anchor bolts installed on an Ø12" bolt circle. A door shall be provided in the base for anchorage and wiring access. A gounding screw shall be provided inside the base opposite the door.

FINISH
The assembly shall be Holophane black powder coat

LUMINAIRE
- Utility Arlington LED
- 100W 4k CCT
- Auto-sensing 120-277V
- Asymmetric Glass Refractor, Spike Finial
- NEMA Twistlock Photocontrol Receptacle
- 25' Prewired Leads
- DTL Solid State Photocontrol 120-277V

For complete specifications see LUM_ARUE.

OPTICAL SYSTEM
Refractor is a thermal resistant borosilicate glass lens to provide an I.E.S. Type III distribution. Acrylic and polycarbonate lens are not acceptable. The optical system in conjunction with a polished reflector and LED circuit board with dedicated heat sink create a sealed optical compartment.

ELECTRICAL MODULE
Alll of the electrical components are mounted on one steel plate that is removable for ease of maintenance.

Anchorage Detail

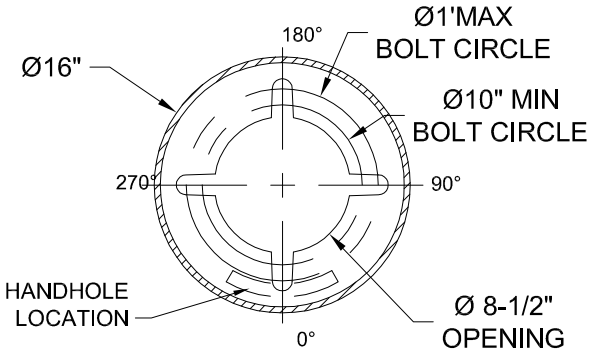

Catalog #'s:
ARUE1004KASG3BSHL25PCS - CSC30CABKH - CHA14F5J16P05ABGBK

Customer Signiture

HOLOPHANE®
LEADER IN LIGHTING SOLUTIONS
An AcuityBrandsCompany

South Jordan Category 1a

ORDER #:	TYPE: Cat 1A	DRAWING #: TSG 007077
REVISION:	REVISION DATE:	
DRAWN: ACH	ORIGIN DATE:	PAGE: 1 of 1

THIS DRAWING, WHEN APPROVED, SHALL BECOME THE COMPLETE SPECIFICATION FOR THE MATERIAL TO BE FURNISHED BY HOLOPHANE ON THE ORDER NOTED ABOVE. A UNIT OF SIMILAR DESIGN MAY BE SUPPLIED, BUT ONLY AFTER APPROVAL BY THE CUSTOMER IN WRITING. ON POLE ORDERS AN ANCHOR BOLT TEMPLATE PRINT WILL BE SUPPLIED WITH EACH ANCHOR BOLT ORDER TO MATCH THE POLE PROVIDED. THIS PRINT IS THE PROPERTY OF HOLOPHANE AND IS LOANED SUBJECT TO RETURN UPON DEMAND AND UPON EXPRESS CONDITION THAT IT WILL NOT BE USED DIRECTLY OR INDIRECTLY IN ANY WAY DETRIMENTAL TO OUR INTERESTS, AND ONLY IN CONNECTION WITH MATERIAL FURNISHED BY HOLOPHANE.

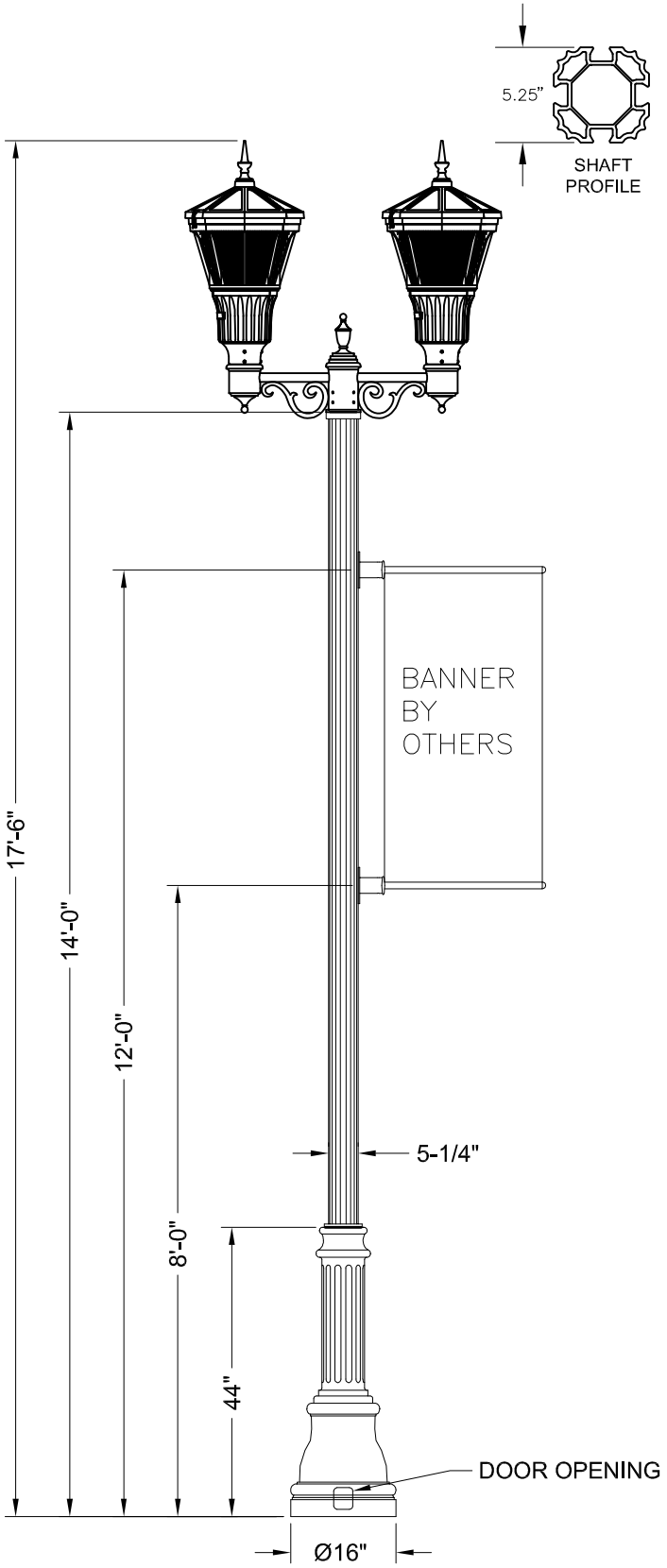

Specifications

POST DESCRIPTION
The lighting post shall be aluminum, one-piece construction, with a classic fluted base design. The shaft profile will consist of 4 mounting tracks and internal passages as shown.

MATERIALS
The base shall be heavy wall, cast aluminum produced from certified ASTM 356.1 ingot per ASTM B-179-95a. The straight shafts shall be extruded from aluminum, ASTM 6061 alloy, heat treated to a T6 temper. All hardware shall be tamper resistant stainless steel. Anchor bolts to be hot dip galvanized.

CONSTRUCTION
The shaft shall be double welded to the base casting and shipped as one piece for maximum structural integrity. The shaft shall be circumferentially welded inside the base casting at the top of the access door, and externally where the shaft exits the base. All exposed welds below 8' shall be ground smooth. All welding shall be per ANSI/AWS D1.2-90. All welders shall be certified per Section 5 of ANSI/AWS D1.2-9.0

DIMENSIONS
The post shall be 14'-0" in height with a 16" diameter base. The shaft diameter shall be 5" at the top of the post, a tenon with a transitional donut shall be provided for arm mounting.

INSTALLATION
The post shall use four L-type anchor bolts installed on a 12" bolt circle. A door shall be provided in the base for anchorage and wiring access. A grounding screw shall be provided inside the base opposite the door.

FINISH
The assembly shall be Holophane black powder coat
LUMINAIRE DESCRIPTION
-Utility Arlington LED
-100W 4K CCT
-Auto-Sensing 120-277v
-Asymmetric Glass Refractor, Spike Finial
-NEMA Twistlock Photocontrol Receptacle
-25' Prewired Leads
-DTL Solid State Photocontrol 120-277v

OPTICAL SYSTEM
Refractor is a thermal resistant borosilicate glass lens to provide an I.E.S. Type III distribution. Acrylic and polycarbonate lens are not acceptable. The optical system in conjunction with a polished reflector and LED circuit board with dedicated heat sink create a sealed optical compartment.

ELECTRICAL MODULE
All of the electrical components are mounted on one steel plate that is removable for ease of maintenance.

Anchorage Detail

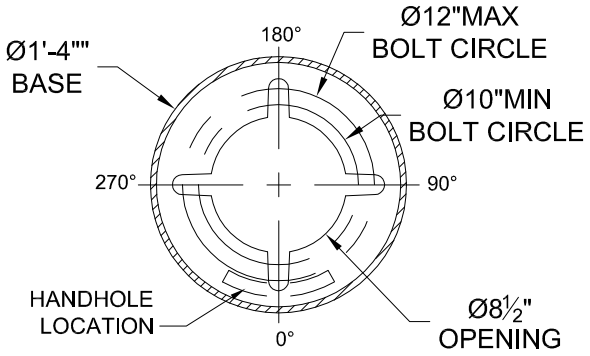

Catalog #'s:
ARUE1004KASG3BSHL25PCS - CSC30CABKH-CHA14L5J16P05ABGBK-BA24L45A4BK

Customer Signiture

HOLOPHANE®
LEADER IN LIGHTING SOLUTIONS
An AcuityBrandsCompany

South Jordan Category 1b

ORDER #:	TYPE: Cat 1b	DRAWING #: TSG 002636
REVISION:	REVISION DATE:	
DRAWN:	ORIGIN DATE:	PAGE: 1 of 1

THIS DRAWING, WHEN APPROVED, SHALL BECOME THE COMPLETE SPECIFICATION FOR THE MATERIAL TO BE FURNISHED BY HOLOPHANE ON THE ORDER NOTED ABOVE. A UNIT OF SIMILAR DESIGN MAY BE SUPPLIED, BUT ONLY AFTER APPROVAL BY THE CUSTOMER IN WRITING. ON POLE ORDERS AN ANCHOR BOLT TEMPLATE PRINT WILL BE SUPPLIED WITH EACH ANCHOR BOLT ORDER TO MATCH THE POLE PROVIDED. THIS PRINT IS THE PROPERTY OF HOLOPHANE AND IS LOANED SUBJECT TO RETURN UPON DEMAND AND UPON EXPRESS CONDITION THAT IT WILL NOT BE USED DIRECTLY OR INDIRECTLY IN ANY WAY DETRIMENTAL TO OUR INTERESTS, AND ONLY IN CONNECTION WITH MATERIAL FURNISHED BY HOLOPHANE.

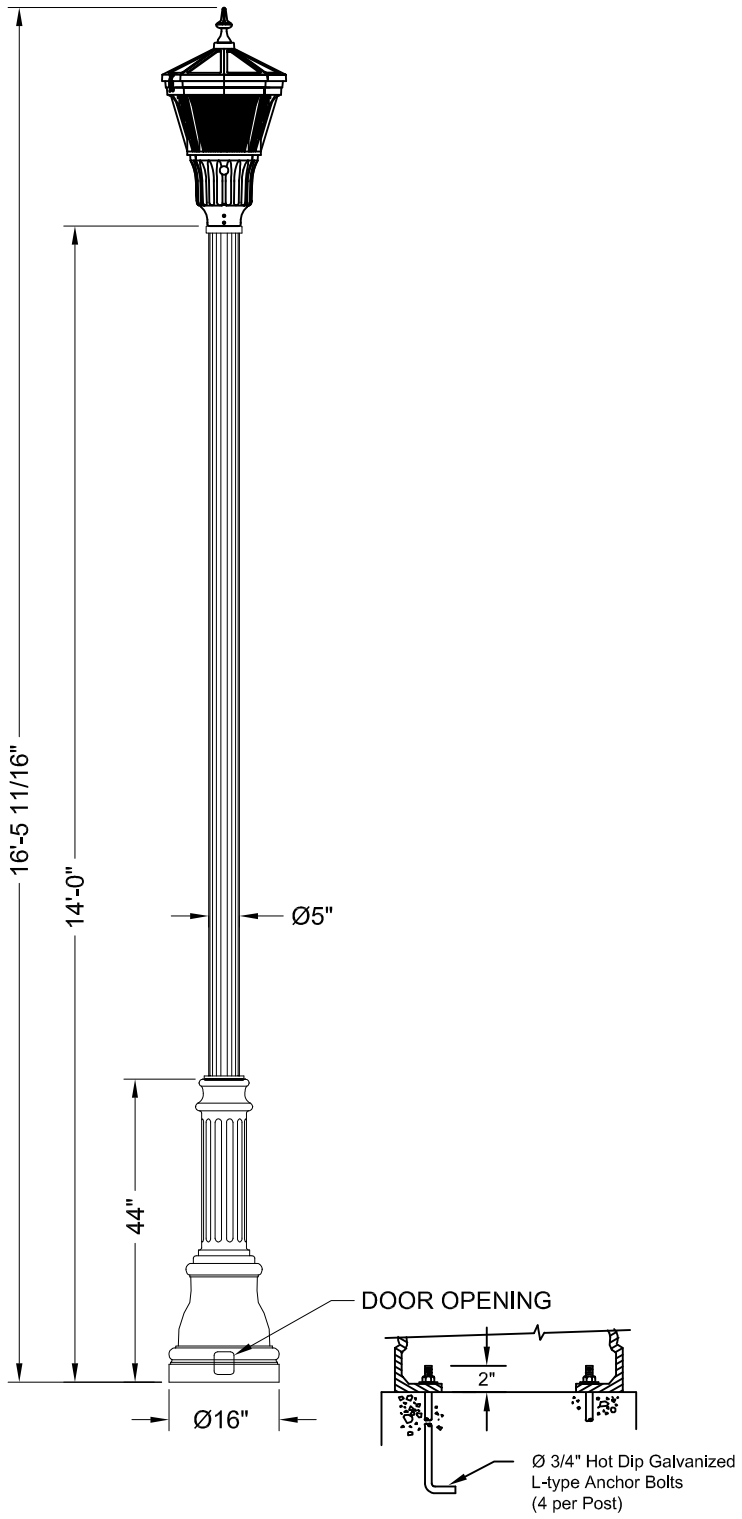

Specifications

POST DESCRIPTION

The lighting post shall be aluminum, one-piece construction, with a classic fluted base design. The shaft profile will consist of 4 mounting tracks and internal passages as shown.

MATERIALS

The base shall be heavy wall, cast aluminum produced from certified ASTM 356.1 ingot per ASTM B-179-95a. The straight shafts shall be extruded from aluminum, ASTM 6061 alloy, heat treated to a T6 temper. All hardware shall be tamper resistant stainless steel. Anchor bolts to be hot dip galvanized.

CONSTRUCTION

The shaft shall be double welded to the base casting and shipped as one piece for maximum structural integrity. The shaft shall be circumferentially welded inside the base casting at the top of the access door, and externally where the shaft exits the base. All exposed welds below 8' shall be ground smooth. All welding shall be per ANSI/AWS D1.2-90. All welders shall be certified per Section 5 of ANSI/AWS D1.2-9.0

DIMENSIONS

The post shall be 14'-0" in height with a 16" diameter base. The shaft diameter shall be 5" at the top of the post, a tenon with a transitional donut shall be provided for arm mounting.

INSTALLATION

The post shall use four L-type anchor bolts installed on a 12" bolt circle. A door shall be provided in the base for anchorage and wiring access. A grounding screw shall be provided inside the base opposite the door.

FINISH

The assembly shall be Holophane black powder coat

LUMINAIRE DESCRIPTION

-Utility Arlington LED
-100W 4K CCT
-Auto-Sensing 120-277v
-Asymmetric Glass Refractor, Spike Finial
-NEMA Twistlock Photocontrol Receptacle
-25' Prewired Leads
-DTL Solid State Photocontrol 120-277v

OPTICAL SYSTEM

Refractor is a thermal resistant borosilicate glass lens to provide an I.E.S. Type III distribution. Acrylic and polycarbonate lens are not acceptable. The optical system in conjunction with a polished reflector and LED circuit board with dedicated heat sink create a sealed optical compartment.

ELECTRICAL MODULE

All of the electrical components are mounted on one steel plate that is removable for ease of maintenance.

Anchorage Detail

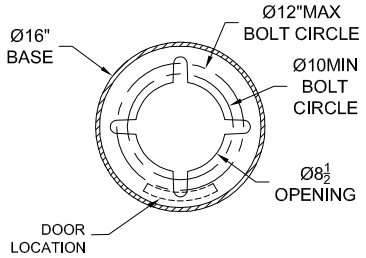

Catalog #'s:
ARUE1004KASG3BSHL25PCS -CHA14L5J16P07ABGBK

Costumer Signature **Date**

HOLOPHANE®
LEADER IN LIGHTING SOLUTIONS
An AcuityBrandsCompany

South Jordan Category 2

ORDER #:	TYPE: Cat 2	DRAWING #: TSG 003175
REVISION:	REVISION DATE:	
DRAWN:	ORIGIN DATE:	PAGE: 1 of 1

THIS DRAWING, WHEN APPROVED, SHALL BECOME THE COMPLETE SPECIFICATION FOR THE MATERIAL TO BE FURNISHED BY HOLOPHANE ON THE ORDER NOTED ABOVE. A UNIT OF SIMILAR DESIGN MAY BE SUPPLIED, BUT ONLY AFTER APPROVAL BY THE CUSTOMER IN WRITING. ON POLE ORDERS AN ANCHOR BOLT TEMPLATE PRINT WILL BE SUPPLIED WITH EACH ANCHOR BOLT ORDER TO MATCH THE POLE PROVIDED. THIS PRINT IS THE PROPERTY OF HOLOPHANE AND IS LOANED SUBJECT TO RETURN UPON DEMAND AND UPON EXPRESS CONDITION THAT IT WILL NOT BE USED DIRECTLY OR INDIRECTLY IN ANY WAY DETRIMENTAL TO OUR INTERESTS, AND ONLY IN CONNECTION WITH MATERIAL FURNISHED BY HOLOPHANE.

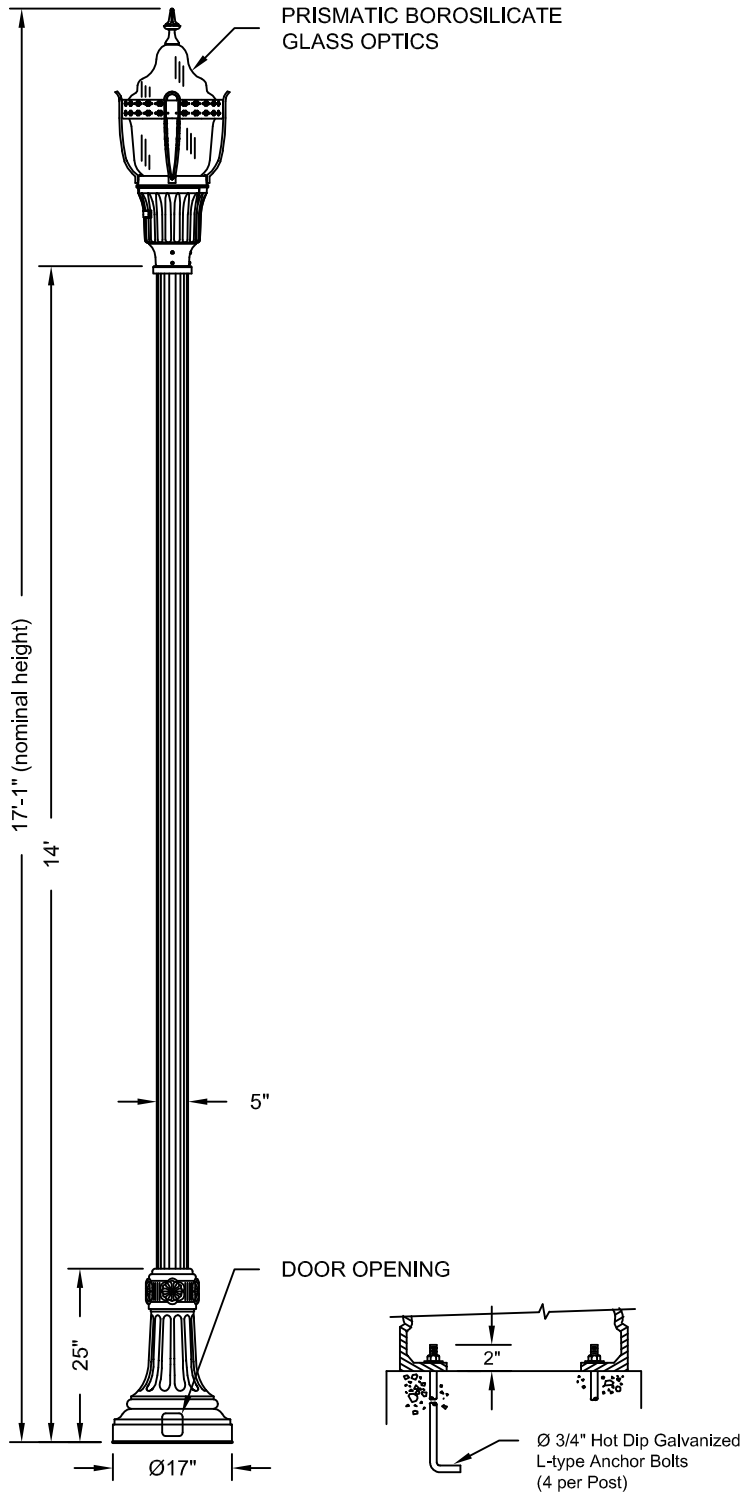

Specifications

POST DESCRIPTION
The lighting post shall be aluminum, one-piece construction, with a classic fluted base design.

MATERIALS
The base shall be heavy wall, cast aluminum produced from certified ASTM 356.1 ingot per ASTM B-179-95a. The straight shafts shall be extruded from aluminum, ASTM 6061 alloy, heat treated to a T6 temper. All hardware shall be tamper resistant stainless steel. Anchor bolts to be hot dip galvanized.

CONSTRUCTION
The shaft shall be double welded to the base casting and shipped as one piece for maximum structural integrity. The shaft shall be circumferentially welded inside the base casting at the top of the access door, and externally where the shaft exits the base. All exposed welds below 8' shall be ground smooth. All welding shall be per ANSI/AWS D1.2-90. All welders shall be certified per Section 5 of ANSI/AWS D1.2-9.0

DIMENSIONS
The post shall be 14'-0" in height with a 16" diameter base. The shaft diameter shall be 5" at the top of the post, a tenon with a transitional donut shall be provided for arm mounting.

INSTALLATION
The post shall use four L-type anchor bolts installed on a 12" bolt circle. A door shall be provided in the base for anchorage and wiring access. A grounding screw shall be provided inside the base opposite the door.

FINISH
The assembly shall be Holophane black powder coat

LUMINAIRE DESCRIPTION
-Utility Granville LED
-100W 4K CCT
-Auto-Sensing 120-277v
-Glass Prismatic Refractor Borosilicate glass, Decorative Cage and Spike Finial
-NEMA Twistlock Photocontrol Receptacle
-25' Prewired Leads
-DTL Solid State Photocontrol 120-277v

OPTICAL SYSTEM
The optical system consists of a precisely molded thermal resistant borosilicate glass refractor and top reflector mounted within the decorative aluminum housing and is not removable. The glass top reflector redirects over 50% of the upward light into controlling refractor while allowing an uplight component to define the acorn shape of the luminaire. I.E.S. type III distribution is provided through the refractor prisms. Acrylic or Polycarbonate optical lens are not acceptable.

ELECTRICAL MODULE
All of the electrical components are mounted on one steel plate that is removable for ease of maintenance.

Anchorage Detail

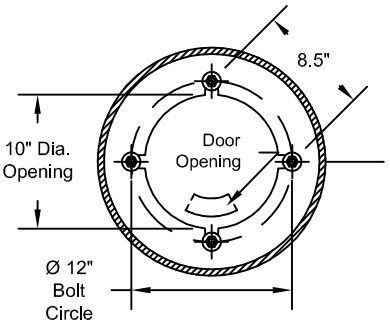

Catalog #'s:
GVD1004KASMB3RSGL25HPCSS NYA14F5J17P07ABG

Costumer Signature **Date**

HOLOPHANE®
LEADER IN LIGHTING SOLUTIONS
An AcuityBrandsCompany

South Jordan Category 3

ORDER #:	TYPE: Cat 3	DRAWING #: TSG 007220
REVISION:	REVISION DATE:	
DRAWN:	ORIGIN DATE:	PAGE: 1 of 1

THIS DRAWING, WHEN APPROVED, SHALL BECOME THE COMPLETE SPECIFICATION FOR THE MATERIAL TO BE FURNISHED BY HOLOPHANE ON THE ORDER NOTED ABOVE. A UNIT OF SIMILAR DESIGN MAY BE SUPPLIED, BUT ONLY AFTER APPROVAL BY THE CUSTOMER IN WRITING. ON POLE ORDERS AN ANCHOR BOLT TEMPLATE PRINT WILL BE SUPPLIED WITH EACH ANCHOR BOLT ORDER TO MATCH THE POLE PROVIDED. THIS PRINT IS THE PROPERTY OF HOLOPHANE AND IS LOANED SUBJECT TO RETURN UPON DEMAND AND UPON EXPRESS CONDITION THAT IT WILL NOT BE USED DIRECTLY OR INDIRECTLY IN ANY WAY DETRIMENTAL TO OUR INTERESTS, AND ONLY IN CONNECTION WITH MATERIAL FURNISHED BY HOLOPHANE.

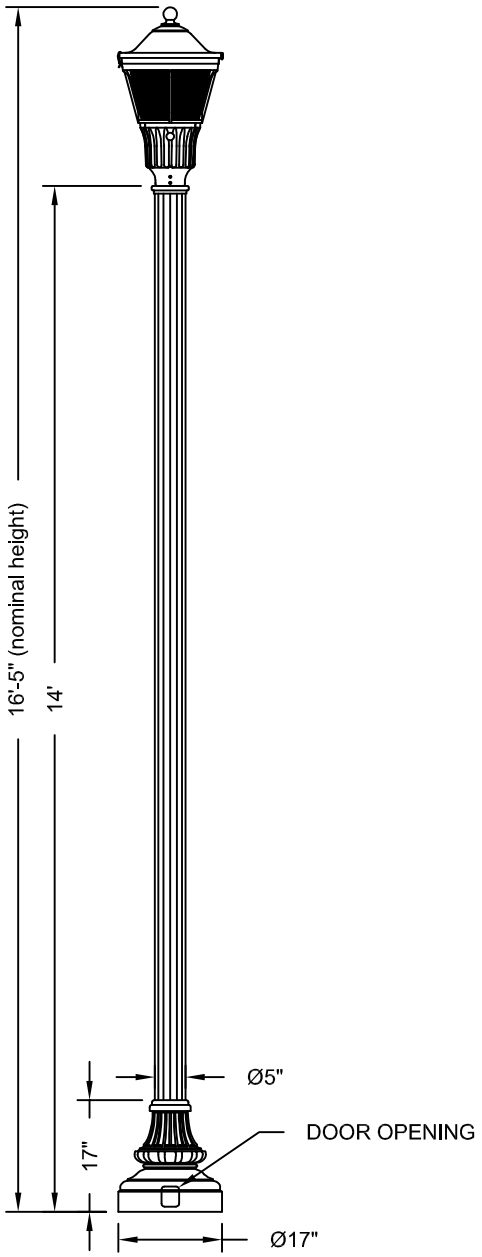

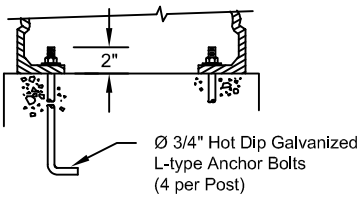

Specifications

POST DESCRIPTION
The lighting post shall be aluminum, one-piece construction, with a classic fluted base design.

MATERIALS
The base shall be heavy wall, cast aluminum produced from certified ASTM 356.1 ingot per ASTM B-179-95a. The straight shafts shall be extruded from aluminum, ASTM 6061 alloy, heat treated to a T6 temper. All hardware shall be tamper resistant stainless steel. Anchor bolts to be hot dip galvanized.

CONSTRUCTION
The shaft shall be double welded to the base casting and shipped as one piece for maximum structural integrity. The shaft shall be circumferentially welded inside the base casting at the top of the access door, and externally where the shaft exits the base. All exposed welds below 8' shall be ground smooth. All welding shall be per ANSI/AWS D1.2-90. All welders shall be certified per Section 5 of ANSI/AWS D1.2-9.0

DIMENSIONS
The post shall be 14'-0" in height with a 16" diameter base. The shaft diameter shall be 5" at the top of the post.

INSTALLATION
The post shall use four L-type anchor bolts installed on a 12" bolt circle. A door shall be provided in the base for anchorage and wiring access. A grounding screw shall be provided inside the base opposite the door.

FINISH
The assembly shall be Holophane black powder coat

LUMINAIRE DESCRIPTION
-Utility Postop LED
-50W 4K CCT
-Auto-Sensing 120-277v
-Asymmetric Glass Refractor, Ball Finial
-NEMA Twistlock Photocontrol Receptacle
-25' Prewired Leads
-DTL Solid State Photocontrol 120-277v

OPTICAL SYSTEM
Refractor is a thermal resistant borosilicate glass lens to provide an I.E.S. Type III distribution. Acrylic and polycarbonate lens are not acceptable. The optical system in conjunction with a polished reflector and LED circuit board with dedicated heat sink create a sealed optical compartment.

ELECTRICAL MODULE
All of the electrical components are mounted on one steel plate that is removable for ease of maintenance.

Anchorage Detail

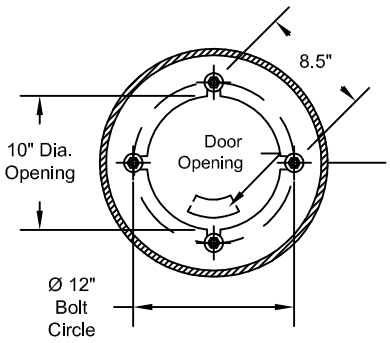

Catalog #'s:
PTUE504KASG3BBHL25PCS WDA14F5J17P07ABGBK

Customer Signiture

HOLOPHANE®
LEADER IN LIGHTING SOLUTIONS
An AcuityBrandsCompany

South Jordan Category 4

ORDER #:	TYPE: Cat 4	DRAWING #: TSG 003314
REVISION:	REVISION DATE:	
DRAWN:	ORIGIN DATE:	PAGE: 1 of 1

THIS DRAWING, WHEN APPROVED, SHALL BECOME THE COMPLETE SPECIFICATION FOR THE MATERIAL TO BE FURNISHED BY HOLOPHANE ON THE ORDER NOTED ABOVE. A UNIT OF SIMILAR DESIGN MAY BE SUPPLIED, BUT ONLY AFTER APPROVAL BY THE CUSTOMER IN WRITING. ON POLE ORDERS AN ANCHOR BOLT TEMPLATE PRINT WILL BE SUPPLIED WITH EACH ANCHOR BOLT ORDER TO MATCH THE POLE PROVIDED. THIS PRINT IS THE PROPERTY OF HOLOPHANE AND IS LOANED SUBJECT TO RETURN UPON DEMAND AND UPON EXPRESS CONDITION THAT IT WILL NOT BE USED DIRECTLY OR INDIRECTLY IN ANY WAY DETRIMENTAL TO OUR INTERESTS, AND ONLY IN CONNECTION WITH MATERIAL FURNISHED BY HOLOPHANE.

Cable Retainer Assy, For 4" Foundation Anchor, Galvanized Steel

SP-6224-GLV

Pelco's anti-theft Cable Retainer is the best solution to help prevent copper cable theft in street light poles. Works with Pelco's PB-5364 4" Foundation Anchor or to existing foundations with a 8"-13-1/2" bolt circle. Secures 3/16" to 1/2" diameter cables.

Cable Retainer Assy, For 6" Foundation Anchor, Galvanized Steel

SP-6200-GLV

Pelco's anti-theft Cable Retainer is the best solution to help prevent copper cable theft in street light poles. Works with Pelco's PB-5372 6" Foundation Anchor or to existing foundations with a 9-1/2"-13-1/2" bolt circle. Secures 3/16" to 1/2" diameter cables.

Note: 1. All assemblies are supplied standard with stainless steel fasteners.

PELCO PRODUCTS, INC.

Cable Retainer Assy, For 8" Foundation Anchor, Galvanized Steel

SP-6205-GLV

Pelco's anti-theft Cable Retainer is the best solution to help prevent copper cable theft in street light poles. Works with Pelco's PB-5375 8" Foundation Anchor or to existing foundations with a 11-1/2"-17" bolt circle. Secures 3/16" to 1/2" diameter cables.

Tube Assembly For 6" Cable Retainer, Galvanized Steel

SP-6358- [ ] -GLV

Length

04.5=4-1/2"
16.38=16-3/8"

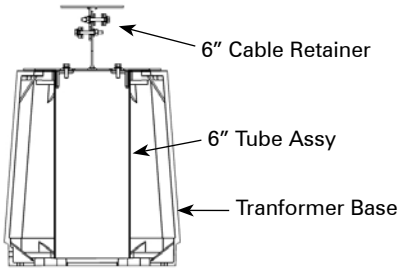

The Tube Assembly mounts underneath Pelco's SP-6200 anti-theft Cable Retainer inside the transformer base. The tube is designed to prevent copper cable theft in street light poles. Available in 4-1/2" or 16-3/8" lengths. Complete with mounting hardware.

Note: 1. All assemblies are supplied standard with stainless steel fasteners.

Door Assy, TB1-17 Tranformer Base "Copper Safe" Theft Deterrent Steel

Coating

PB-5520-[ ]

P_ _=Paint

Pelco's "Copper Safe" Transformer Doors are shatter-resistant and pull-off resistant to protect against copper theft. Typically powder coated P40 Silver, other colors available. Requires AP-5121 Kit for installation.

Door Assy, TB1-20 Tranformer Base "Copper Safe" Theft Deterrent Steel

Coating

PB-5526-[ ]

P_ _=Paint

Pelco's "Copper Safe" Transformer Doors are shatter-resistant and pull-off resistant to protect against copper theft. Typically powder coated P40 Silver, other colors available. Requires AP-5121 Kit for installation.

Note: 1. All assemblies are supplied standard with stainless steel fasteners.
2. See Reference Section for available paint colors.